MODULE 2 – Part 2

Seismic design according to codes used in Palestine

Seismic design according to codes used in Palestine

ID	subject
1	Seismic Forces- Methods of analysis
2	Selection of Analysis Method (UBC 97 specifications)
3	Regular and irregular structures
4	Equivalent lateral force method (Static Method)- UBC 97
5	Equivalent lateral force method (Static method)- IBC2009
6	Example 1: Intermediate moment resisting frames lateral force resisting system
7	Example 2: Shear Walls Concrete Building Bearing System
8	Example 3: Shear walls concrete building frame system
9	Structural Details
10	Structural Analysis and design

Seismic Forces- Methods of Analysis

- **Equivalent Static Method**: the seismic force effect on the structure can be translated to equivalent lateral force at the base of the structure which can be distributed to different stories and thus to the vertical structural elements (frames and/ or shear walls)

- **Dynamic Analysis**: the analysis shall be based on an appropriate ground motion representation and shall be performed using accepted principles of dynamics. The main methods of dynamic analysis are response spectrum analysis and time- history analysis.

- **Response Spectrum Analysis:** an elastic dynamic analysis of a structure utilizing the peak dynamic response of all modes having a significant contribution to total structural response. Peak modal responses are calculated using the ordinates of the appropriate response spectrum curve which corresponds to the modal periods. Maximum modal contributions are combined in a statical manner to obtain an approximate total structural response.

- **Time History Analysis:** an analysis of the dynamic response of a structure at each increment of time when the base is subjected to a specific ground motion time history.

Selection of Analysis Method (UBC 97 specifications):

1. Any structure may be, and certain structures defined below shall be, designed using dynamic lateral-force procedures; methods.

2. **Static Method**: The static lateral force procedure of Section 1630 in UBC 97 may be used for the following structures:

Static Method:

a) All structures, regular or irregular, in Seismic Zone 1 and in Occupancy Categories 4 and 5 in Seismic Zone 2.

b) Regular structures under 240 feet (73 m) in height with lateral force resistance provided by systems listed in **Table 16-N**, except where **Section 1629.8.4**, Item 4, applies (point d below).

Static Method:

c) Irregular structures not more than five stories or 65 feet (19.8 m) in height.

d) Structures having a flexible upper portion supported on a rigid lower portion where both portions of the structure considered separately can be classified as being regular, the average story stiffness of the lower portion is at least 10 times the average story stiffness of the upper portion and the period of the entire structure is not greater than 1.1 times the period of the upper portion considered as a separate structure fixed at the base.

Selection of Analysis Method (UBC 97 specifications):

3. **Dynamic Analysis**: The dynamic lateral-force procedure of **Section 1631** of UBC 97 shall be used for all other structures, including the following:

Dynamic Analysis:

a. Structures 240 feet (73.2 m) or more in height, except as permitted by **Section 1629.8.3**, Item 1 (point **a** in step 2).

b. Structures having a stiffness, weight or geometric vertical irregularity of Type 1, 2 or 3, as defined in **Table 16-L**, or structures having irregular features not described in **Table 16-L** or **16-M.**

Dynamic Analysis:

c. Structures over five stories or 65 feet (19.8 m) in height in Seismic Zones 3 and 4 not having the same structural system throughout their height except as permitted by **Section 1630.4.2** (some specifications dealing with story stiffnesses).

Dynamic Analysis:

d. Structures, regular or irregular, located on Soil Profile Type S_F, that have a period greater than 0.7 second. The analysis shall include the effects of the soils at the site and shall conform to **Section 1631.2**, Item 4(Possible amplification of building response due to the effects of soil-structure interaction and lengthening of building period caused by inelastic behavior shall be considered)

Regular and Irregular Structures:

- **Regular structures:**

  Regular structures have no significant physical discontinuities in plan or vertical configuration or in their lateral-force-resisting systems such as the irregular features described in UBC 97 **Section 1629.5.3**.

Regular and Irregular Structures:

- **Irregular structures:**

1. Irregular structures have significant physical discontinuities in configuration or in their lateral-force-resisting systems. Irregular features include, but are not limited to, those described in **Tables 16-L** and **16-M**. All structures in Seismic Zone 1 and Occupancy Categories 4 and 5 in Seismic Zone 2 need to be evaluated only for vertical irregularities of Type 5 (**Table 16-L**) and horizontal irregularities of Type 1 (**Table 16-M**).

Regular and Irregular Structures:

2. Structures having any of the features listed in **Table 16-L** shall be designated as if having a vertical irregularity.

EXCEPTION:

Where no story drift ratio under design lateral forces is greater than 1.3 times the story drift ratio of the story above, the structure may be deemed to not have the structural irregularities of Type 1 or 2 in **Table 16**

L. The story drift ratio for the top two stories need not be considered. The story drifts for this determination may be calculated neglecting torsional effects.

Regular and Irregular Structures:

3. Structures having any of the features listed in **Table 16-M** shall be designated as having a plan irregularity.

Equivalent Lateral Force Method (Static Method)- UBC 97:

- The total design base shear in a given direction shall be determined from the following formula:

$$V = \frac{C_v I}{RT} W \qquad UBC97 \quad 30-4$$

- The total design base shear need not exceed the following:

$$V = \frac{2.5 C_a I}{R} W \qquad UBC97 \quad 30-5$$

- The total design base shear shall not be less than the following:

$$V = 0.11 C_a I W \qquad UBC97 \quad 30-6$$

- In addition, for seismic zone 4, the total base shear shall also be not less than the following:

$$V = \frac{0.8 Z N_v I}{R} W \qquad UBC97 \quad 30-7$$

Equivalent Lateral Force Method (Static Method)- UBC 97:

Where:

- Z= seismic zone factor, **Table 16-I.**
- I= importance factor, **Table 16K.**
- R= numerical coefficient representative of the inherent over strength and global ductility capacity of lateral- force- resisting systems, **Table 16-N.**
- C_a=acceleration seismic coefficient, **Table 16-Q.**
- C_v= velocity seismic coefficient, **Table 16-R.**
- N_v= near source factor, **Table 16-T.**

Equivalent Lateral Force Method (Static Method)- UBC 97:

Where:

- W= the total dead load and applicable portions of other loads listed below:

1. In storage and warehouse occupancies, a minimum of 25% of the floor live load shall be applicable
2. Design snow loads of 1.5kN/m^2 or less need not be included. Where design snow loads exceed 1.5 kN/m^2, the design snow load shall be included
3. Total weight of permanent equipment shall be included

Soil Profile Type:

Soil Profile Types S_A, S_B, S_C, S_D and S_E are defined in **Table 16-J** and Soil Profile Type S_F is defined as soils requiring site-specific evaluation as follows:

1. Soils vulnerable to potential failure or collapse under seismic loading, such as liquefiable soils, quick and highly sensitive clays, and collapsible weakly cemented soils.
2. Peats and/or highly organic clays, where the thickness of peat or highly organic clay exceeds 10 feet (3 m)
3. Very high plasticity clays with a plasticity index, $PI > 75$, where the depth of clay exceeds 25 feet (7.6 m).
4. Very thick soft/medium stiff clays, where the depth of clay exceeds 120 feet (36.6 m).

Structure Period:

- **Method A:**

The period, T is given by:

$$T = C_t(h_n)^{\frac{3}{4}}$$

Where:

- h_n= height of structure in meters
- C_t= factor given by:

  C_t=0.0853 for steel moment resisting frames

  C_t= 0.0731 for reinforced concrete moment resisting frames and eccentrically braced frames

  C_t=0.0488 for all other buildings
- T= is the basic natural period of a simple one degree of freedom system which is the time required to complete one whole cycle during dynamic loading.

Structure Period: (Method A)

Where:

- h_n= height of structure in meters
- C_t= factor given by:

  C_t=0.0853 for steel moment resisting frames

  C_t= 0.0731 for reinforced concrete moment resisting frames and eccentrically braced frames

  C_t=0.0488 for all other buildings
- T= is the basic natural period of a simple one degree of freedom system which is the time required to complete one whole cycle during dynamic loading

Structure Period: (Method A)

T can be given by:

$$T = \frac{2\pi}{\omega} = \frac{2\pi}{\sqrt{K/M}} = 2\pi \ second/cycle$$

The Natural frequency, f is given by:

$$f = \frac{1}{T} = \frac{\omega}{2\pi}$$

Where:

- ω= angular frequency of the system
- m= mass of system
- k= spring constant and damping is not considered

Structure Period:

- **Method B:**

  The fundamental period T may be calculated using the structural properties and deformational characteristics of the resisting elements in a properly substantiated analysis. The analysis shall be in accordance with the requirements of Section1630.1.2 **(**The mathematical model of the physical structure shall include all elements of the lateral force-resisting system. The model shall also include the stiffness and strength of elements, which are significant to the distribution of forces, and shall represent the spatial distribution of the mass and stiffness of the structure. In addition, the model shall comply with the following: 1. Stiffness properties of reinforced concrete and masonry elements shall consider the effects of cracked sections. 2. For steel moment frame systems, the contribution of panel zone deformations to overall story drift shall be included**).**

Structure Period: (Method B)

The value of *T* from **Method B** shall not exceed a value 30 percent greater than the value of *T* obtained from **Method A** in Seismic Zone 4, and 40 percent in Seismic Zones 1, 2 and 3. The fundamental period *T* may be computed by using the following formula:

$$T = 2\pi \sqrt{\left(\sum_{i=1}^{n} w_i {\delta_i}^2\right) \div \left(g \sum_{i=1}^{n} f_i \delta_i\right)}$$

The values of *fi* represent any lateral force distributed approximately in accordance with the principles of Formulas stated in code (equations (30-13), (30-14) and (30-15) for Ft and Fx) or any other rational distribution. The elastic deflections, δi, shall be calculated using the applied lateral forces, *fi*.

Vertical Distribution of Forces:

A concentrated force F_t that shall be applied at the top of the structure as part of the base shear shall be determined from the following formula:

$$F_t = 0.07TV \leq 0.25V \; for \; T > 0.7 \; seconds$$

And

$$F_t = 0.0 \; for \; T \leq 0.7 \; seconds$$

So,

The total base shear, V will be:

$$V = F_t + \sum_{i=1}^{n} F_i$$

$$F_x = \frac{(V - F_t)w_x h_x}{\sum_{i=1}^{n} w_i h_i}$$

Vertical Distribution of Forces:

Where:

- F_x= design seismic force applied to level x,
- W_x= that portion of weight, W located at or assigned to level x
- W_i= that portion of weight, w located to or assigned to level i
- h_x, h_i= height in meters above the base to level x or i, respectively

Horizontal Distribution of Shear:

The design story shear, V_x, in any story is the sum of the forces F_t and F_x above that story. V_x shall be distributed to the various elements of the vertical lateral-force-resisting system in proportion to their rigidities, considering the rigidity of the diaphragm.

Horizontal Distribution of Shear:

Where diaphragms are not flexible, the mass at each level shall be assumed to be displaced from the calculated center of mass in each direction a distance equal to 5 percent of the building dimension at that level perpendicular to the direction of the force under consideration. The effect of this displacement on the story shear distribution shall be considered.

Horizontal Distribution of Shear:

Diaphragms shall be considered flexible for the purposes of distribution of story shear and torsional moment when the maximum lateral deformation of the diaphragm is more than two times the average story drift of the associated story. This may be determined by comparing the computed midpoint in-plane deflection of the diaphragm itself under lateral load with the story drift of adjoining vertical-resisting elements under equivalent tributary lateral load.

UBC 97 Design Response Spectra (Dynamic Analysis):

The design response spectrum is shown in **Figure 1** below.

$$T_s = \frac{C_v}{2.5C_a}$$

$$T_o = 0.2T_s$$

UBC 97 Design Response Spectra (Dynamic Analysis):

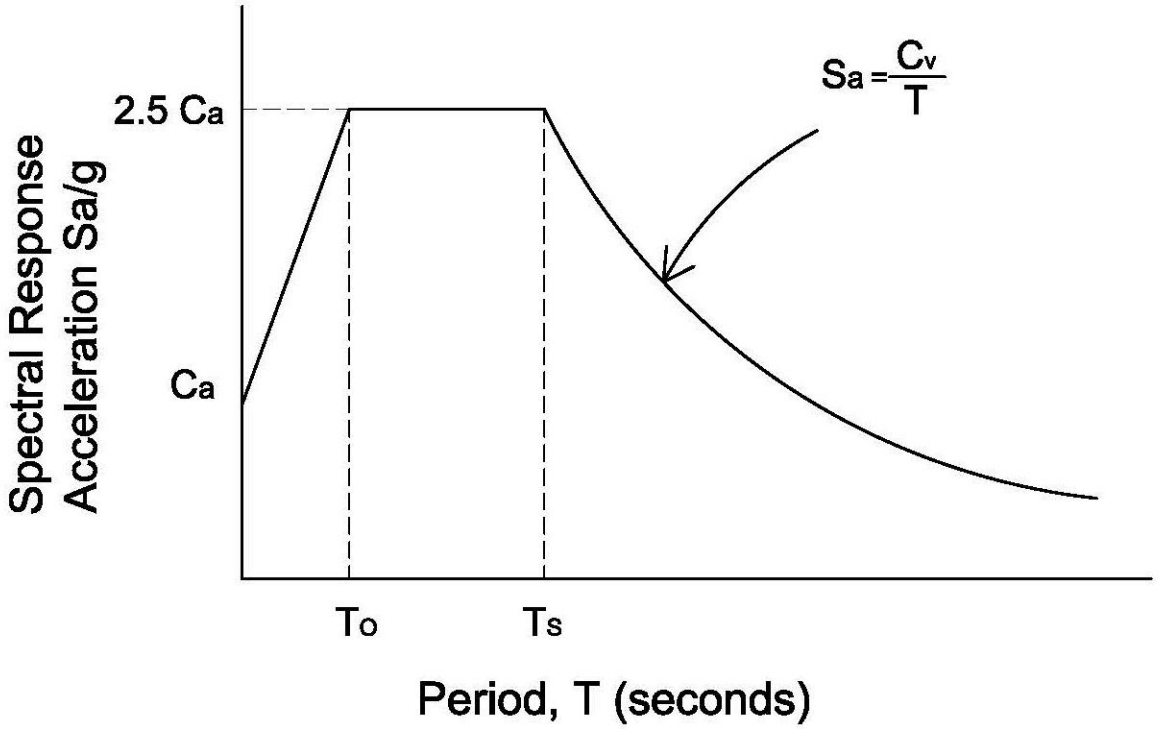

Figure 1: UBC 97 Design Response Spectra

Principles of Dynamic Analysis- Response Spectrum:

A mathematical model of the physical structure shall represent the spatial distribution of the mass and stiffness of the structure to an extent that is adequate for the calculation of the significant features of its dynamic response. A three-dimensional model shall be used for the dynamic analysis of structures with highly irregular plan configurations such as those having a plan irregularity defined in Table 16-M and having a rigid or semirigid diaphragm. The stiffness properties used in the analysis and general mathematical modeling shall be in accordance with Section 1630.1.2

Principles of Dynamic Analysis- Response Spectrum:

The requirement of UBC 97- **Section 1631.4.1** that all significant modes be included may be satisfied by demonstrating that for the modes considered, at least 90 percent of the participating mass of the structure is included in the calculation of response for each principal horizontal direction.

Principles of Dynamic Analysis- Response Spectrum:

For all regular structures where the ground motion representation complies with **Section 1631.2** Item 1 (design base shear equations), Elastic Response Parameters may be reduced such that the corresponding design base shear is not less than 90 percent of the base shear determined in accordance with **Section 1630.2**.

Principles of Dynamic Analysis- Response Spectrum:

For all regular structures where the ground motion representation complies with **Section 1631.2**, Item 2 (structural period calculations), Elastic Response Parameters may be reduced such that the corresponding design base shear is not less than 80 percent of the base shear determined in accordance with **Section 1630.2**.

Principles of Dynamic Analysis- Response Spectrum:

For all irregular structures, regardless of the ground motion representation, Elastic Response Parameters may be reduced such that the corresponding design base shear is not less than 100 percent of the base shear determined in accordance with **Section 1630.2**.

Principles of Dynamic Analysis- Response Spectrum:

TABLE 16-I—SEISMIC ZONE FACTOR *Z*

ZONE	1	2A	2B	3	4
Z	0.075	0.15	0.20	0.30	0.40

NOTE: The zone shall be determined from the seismic zone map in Figure 16-2.

TABLE 16-J—SOIL PROFILE TYPES

SOIL PROFILE TYPE	SOIL PROFILE NAME/GENERIC DESCRIPTION	AVERAGE SOIL PROPERTIES FOR TOP 100 FEET (30 480 mm) OF SOIL PROFILE		
		Shear Wave Velocity, $\bar{v}_s$ feet/second (m/s)	Standard Penetration Test, $\bar{N}$ [or $\bar{N}_{CH}$ for cohesionless soil layers] (blows/foot)	Undrained Shear Strength, $\bar{s}_u$ psf (kPa)
S_A	Hard Rock	> 5,000 (1,500)	—	—
S_B	Rock	2,500 to 5,000 (760 to 1,500)		
S_C	Very Dense Soil and Soft Rock	1,200 to 2,500 (360 to 760)	> 50	> 2,000 (100)
S_D	Stiff Soil Profile	600 to 1,200 (180 to 360)	15 to 50	1,000 to 2,000 (50 to 100)
S_E[1]	Soft Soil Profile	< 600 (180)	< 15	< 1,000 (50)
S_F	Soil Requiring Site-specific Evaluation. See Section 1629.3.1.			

[1]Soil Profile Type S_E also includes any soil profile with more than 10 feet (3048 mm) of soft clay defined as a soil with a plasticity index, $PI > 20$, $w_{mc} \geq 40$ percent and $s_u < 500$ psf (24 kPa). The Plasticity Index, PI, and the moisture content, w_{mc}, shall be determined in accordance with approved national standards.

TABLE 16-K—OCCUPANCY CATEGORY

OCCUPANCY CATEGORY	OCCUPANCY OR FUNCTIONS OF STRUCTURE	SEISMIC IMPORTANCE FACTOR, I	SEISMIC IMPORTANCE[1] FACTOR, I_p	WIND IMPORTANCE FACTOR, I_w
1. Essential facilities[2]	Group I, Division 1 Occupancies having surgery and emergency treatment areas Fire and police stations Garages and shelters for emergency vehicles and emergency aircraft Structures and shelters in emergency-preparedness centers Aviation control towers Structures and equipment in government communication centers and other facilities required for emergency response Standby power-generating equipment for Category 1 facilities Tanks or other structures containing housing or supporting water or other fire-suppression material or equipment required for the protection of Category 1, 2 or 3 structures	1.25	1.50	1.15
2. Hazardous facilities	Group H, Divisions 1, 2, 6 and 7 Occupancies and structures therein housing or supporting toxic or explosive chemicals or substances Nonbuilding structures housing, supporting or containing quantities of toxic or explosive substances that, if contained within a building, would cause that building to be classified as a Group H, Division 1, 2 or 7 Occupancy	1.25	1.50	1.15
3. Special occupancy structures[3]	Group A, Divisions 1, 2 and 2.1 Occupancies Buildings housing Group E, Divisions 1 and 3 Occupancies with a capacity greater than 300 students Buildings housing Group B Occupancies used for college or adult education with a capacity greater than 500 students Group I, Divisions 1 and 2 Occupancies with 50 or more resident incapacitated patients, but not included in Category 1 Group I, Division 3 Occupancies All structures with an occupancy greater than 5,000 persons Structures and equipment in power-generating stations, and other public utility facilities not included in Category 1 or Category 2 above, and required for continued operation	1.00	1.00	1.00
4. Standard occupancy structures[3]	All structures housing occupancies or having functions not listed in Category 1, 2 or 3 and Group U Occupancy towers	1.00	1.00	1.00
5. Miscellaneous structures	Group U Occupancies except for towers	1.00	1.00	1.00

[1]The limitation of I_p for panel connections in Section 1633.2.4 shall be 1.0 for the entire connector.
[2]Structural observation requirements are given in Section 1702.
[3]For anchorage of machinery and equipment required for life-safety systems, the value of I_p shall be taken as 1.5.

Principles of Dynamic Analysis- Response Spectrum:

TABLE 16-L—VERTICAL STRUCTURAL IRREGULARITIES

IRREGULARITY TYPE AND DEFINITION	REFERENCE SECTION
1. **Stiffness irregularity—soft story** A soft story is one in which the lateral stiffness is less than 70 percent of that in the story above or less than 80 percent of the average stiffness of the three stories above.	1629.8.4, Item 2
2. **Weight (mass) irregularity** Mass irregularity shall be considered to exist where the effective mass of any story is more than 150 percent of the effective mass of an adjacent story. A roof that is lighter than the floor below need not be considered.	1629.8.4, Item 2
3. **Vertical geometric irregularity** Vertical geometric irregularity shall be considered to exist where the horizontal dimension of the lateral-force-resisting system in any story is more than 130 percent of that in an adjacent story. One-story penthouses need not be considered.	1629.8.4, Item 2
4. **In-plane discontinuity in vertical lateral-force-resisting element** An in-plane offset of the lateral-load-resisting elements greater than the length of those elements.	1630.8.2
5. **Discontinuity in capacity—weak story** A weak story is one in which the story strength is less than 80 percent of that in the story above. The story strength is the total strength of all seismic-resisting elements sharing the story shear for the direction under consideration.	1629.9.1

TABLE 16-M—PLAN STRUCTURAL IRREGULARITIES

IRREGULARITY TYPE AND DEFINITION	REFERENCE SECTION
1. **Torsional irregularity—to be considered when diaphragms are not flexible** Torsional irregularity shall be considered to exist when the maximum story drift, computed including accidental torsion, at one end of the structure transverse to an axis is more than 1.2 times the average of the story drifts of the two ends of the structure.	1633.1, 1633.2.9, Item 6
2. **Re-entrant corners** Plan configurations of a structure and its lateral-force-resisting system contain re-entrant corners, where both projections of the structure beyond a re-entrant corner are greater than 15 percent of the plan dimension of the structure in the given direction.	1633.2.9, Items 6 and 7
3. **Diaphragm discontinuity** Diaphragms with abrupt discontinuities or variations in stiffness, including those having cutout or open areas greater than 50 percent of the gross enclosed area of the diaphragm, or changes in effective diaphragm stiffness of more than 50 percent from one story to the next.	1633.2.9, Item 6
4. **Out-of-plane offsets** Discontinuities in a lateral force path, such as out-of-plane offsets of the vertical elements.	1630.8.2; 1633.2.9, Item 6; 2213.9.1
5. **Nonparallel systems** The vertical lateral-load-resisting elements are not parallel to or symmetric about the major orthogonal axes of the lateral-force-resisting system.	1633.1

Principles of Dynamic Analysis- Response Spectrum:

TABLE 16-N—STRUCTURAL SYSTEMS[1]

BASIC STRUCTURAL SYSTEM[2]	LATERAL-FORCE-RESISTING SYSTEM DESCRIPTION	R	Ω_o	HEIGHT LIMIT FOR SEISMIC ZONES 3 AND 4 (feet) × 304.8 for mm
1. Bearing wall system	1. Light-framed walls with shear panels			
	a. Wood structural panel walls for structures three stories or less	5.5	2.8	65
	b. All other light-framed walls	4.5	2.8	65
	2. Shear walls			
	a. Concrete	4.5	2.8	160
	b. Masonry	4.5	2.8	160
	3. Light steel-framed bearing walls with tension-only bracing	2.8	2.2	65
	4. Braced frames where bracing carries gravity load			
	a. Steel	4.4	2.2	160
	b. Concrete[3]	2.8	2.2	—
	c. Heavy timber	2.8	2.2	65
2. Building frame system	1. Steel eccentrically braced frame (EBF)	7.0	2.8	240
	2. Light-framed walls with shear panels			
	a. Wood structural panel walls for structures three stories or less	6.5	2.8	65
	b. All other light-framed walls	5.0	2.8	65
	3. Shear walls			
	a. Concrete	5.5	2.8	240
	b. Masonry	5.5	2.8	160
	4. Ordinary braced frames			
	a. Steel	5.6	2.2	160
	b. Concrete[3]	5.6	2.2	—
	c. Heavy timber	5.6	2.2	65
	5. Special concentrically braced frames			
	a. Steel	6.4	2.2	240

Principles of Dynamic Analysis- Response Spectrum:

3. Moment-resisting frame system	1. Special moment-resisting frame (SMRF)			
	a. Steel	8.5	2.8	N.L.
	b. Concrete[4]	8.5	2.8	N.L.
	2. Masonry moment-resisting wall frame (MMRWF)	6.5	2.8	160
	3. Concrete intermediate moment-resisting frame (IMRF)[5]	5.5	2.8	—
	4. Ordinary moment-resisting frame (OMRF)			
	a. Steel[6]	4.5	2.8	160
	b. Concrete[7]	3.5	2.8	—
	5. Special truss moment frames of steel (STMF)	6.5	2.8	240
4. Dual systems	1. Shear walls			
	a. Concrete with SMRF	8.5	2.8	N.L.
	b. Concrete with steel OMRF	4.2	2.8	160
	c. Concrete with concrete IMRF[5]	6.5	2.8	160
	d. Masonry with SMRF	5.5	2.8	160
	e. Masonry with steel OMRF	4.2	2.8	160
	f. Masonry with concrete IMRF[3]	4.2	2.8	—
	g. Masonry with masonry MMRWF	6.0	2.8	160
	2. Steel EBF			
	a. With steel SMRF	8.5	2.8	N.L.
	b. With steel OMRF	4.2	2.8	160
	3. Ordinary braced frames			
	a. Steel with steel SMRF	6.5	2.8	N.L.
	b. Steel with steel OMRF	4.2	2.8	160
	c. Concrete with concrete SMRF[3]	6.5	2.8	—
	d. Concrete with concrete IMRF[3]	4.2	2.8	—
	4. Special concentrically braced frames			
	a. Steel with steel SMRF	7.5	2.8	N.L.
	b. Steel with steel OMRF	4.2	2.8	160
5. Cantilevered column building systems	1. Cantilevered column elements	2.2	2.0	35[7]
6. Shear wall-frame interaction systems	1. Concrete[8]	5.5	2.8	160
7. Undefined systems	See Sections 1629.6.7 and 1629.9.2	—	—	—

N.L.—no limit

[1]See Section 1630.4 for combination of structural systems.

[2]Basic structural systems are defined in Section 1629.6.

[3]Prohibited in Seismic Zones 3 and 4.

[4]Includes precast concrete conforming to Section 1921.2.7.

[5]Prohibited in Seismic Zones 3 and 4, except as permitted in Section 1634.2.

[6]Ordinary moment-resisting frames in Seismic Zone 1 meeting the requirements of Section 2211.6 may use a R value of 8.

[7] Total height of the building including cantilevered columns.

[8]Prohibited in Seismic Zones 2A, 2B, 3 and 4. See Section 1633.2.7.

Principles of Dynamic Analysis- Response Spectrum:

TABLE 16-O—HORIZONTAL FORCE FACTORS, a_p AND R_p

ELEMENTS OF STRUCTURES AND NONSTRUCTURAL COMPONENTS AND EQUIPMENT[1]	a_p	R_p	FOOTNOTE
1. Elements of Structures			
A. Walls including the following:			
(1) Unbraced (cantilevered) parapets.	2.5	3.0	
(2) Exterior walls at or above the ground floor and parapets braced above their centers of gravity.	1.0	3.0	2
(3) All interior-bearing and nonbearing walls.	1.0	3.0	2
B. Penthouse (except when framed by an extension of the structural frame).	2.5	4.0	
C. Connections for prefabricated structural elements other than walls. See also Section 1632.2.	1.0	3.0	3
2. Nonstructural Components			
A. Exterior and interior ornamentations and appendages.	2.5	3.0	
B. Chimneys, stacks and trussed towers supported on or projecting above the roof:			
(1) Laterally braced or anchored to the structural frame at a point below their centers of mass.	2.5	3.0	
(2) Laterally braced or anchored to the structural frame at or above their centers of mass.	1.0	3.0	
C. Signs and billboards.	2.5	3.0	
D. Storage racks (include contents) over 6 feet (1829 mm) tall.	2.5	4.0	4
E. Permanent floor-supported cabinets and book stacks more than 6 feet (1829 mm) in height (include contents).	1.0	3.0	5
F. Anchorage and lateral bracing for suspended ceilings and light fixtures.	1.0	3.0	3, 6, 7, 8
G. Access floor systems.	1.0	3.0	4, 5, 9
H. Masonry or concrete fences over 6 feet (1829 mm) high.	1.0	3.0	
I. Partitions.	1.0	3.0	
3. Equipment			
A. Tanks and vessels (include contents), including support systems.	1.0	3.0	
B. Electrical, mechanical and plumbing equipment and associated conduit and ductwork and piping.	1.0	3.0	5, 10, 11, 12, 13, 14, 15, 16

Principles of Dynamic Analysis- Response Spectrum:

C. Any flexible equipment laterally braced or anchored to the structural frame at a point below their center of mass.	2.5	3.0	5, 10, 14, 15, 16
D. Anchorage of emergency power supply systems and essential communications equipment. Anchorage and support systems for battery racks and fuel tanks necessary for operation of emergency equipment. See also Section 1632.2.	1.0	3.0	17, 18
E. Temporary containers with flammable or hazardous materials.	1.0	3.0	19
4. Other Components			
A. Rigid components with ductile material and attachments.	1.0	3.0	1
B. Rigid components with nonductile material or attachments.	1.0	1.5	1
C. Flexible components with ductile material and attachments.	2.5	3.0	1
D. Flexible components with nonductile material or attachments.	2.5	1.5	1

[1]See Section 1627 for definitions of flexible components and rigid components.

[2]See Sections 1633.2.4 and 1633.2.8 for concrete and masonry walls and Section 1632.2 for connections for panel connectors for panels.

[3]Applies to Seismic Zones 2, 3 and 4 only.

[4]Ground supported steel storage racks may be designed using the provisions of Section 1634. Chapter 22, Division VI, may be used for design, provided seismic design forces are equal to or greater than those specified in Section 1632.2 or 1634.2, as appropriate.

[5]Only attachments, anchorage or restraints need be designed.

[6]Ceiling weight shall include all light fixtures and other equipment or partitions that are laterally supported by the ceiling. For purposes of determining the seismic force, a ceiling weight of not less than 4 psf (0.19 kN/m^2) shall be used.

[7]Ceilings constructed of lath and plaster or gypsum board screw or nail attached to suspended members that support a ceiling at one level extending from wall to wall need not be analyzed, provided the walls are not over 50 feet (15 240 mm) apart.

[8]Light fixtures and mechanical services installed in metal suspension systems for acoustical tile and lay-in panel ceilings shall be independently supported from the structure above as specified in UBC Standard 25-2, Part III.

[9]W_p for access floor systems shall be the dead load of the access floor system plus 25 percent of the floor live load plus a 10-psf (0.48 kN/m^2) partition load allowance.

[10]Equipment includes, but is not limited to, boilers, chillers, heat exchangers, pumps, air-handling units, cooling towers, control panels, motors, switchgear, transformers and life-safety equipment. It shall include major conduit, ducting and piping, which services such machinery and equipment and fire sprinkler systems. See Section 1632.2 for additional requirements for determining a_p for nonrigid or flexibly mounted equipment.

[11]Seismic restraints may be omitted from piping and duct supports if all the following conditions are satisfied:

[11.1]Lateral motion of the piping or duct will not cause damaging impact with other systems.

Principles of Dynamic Analysis- Response Spectrum:

FOOTNOTES TO TABLE 16-O—(Continued)

[12]Seismic restraints may be omitted from electrical raceways, such as cable trays, conduit and bus ducts, if all the following conditions are satisfied:

[12.1]Lateral motion of the raceway will not cause damaging impact with other systems.

[12.2]Lateral motion of the raceway does not cause loss of system vertical support.

[12.3]Rod-hung supports of less than 12 inches (305 mm) in length have top connections that cannot develop moments.

[12.4]Support members cantilevered up from the floor are checked for stability.

[13]Piping, ducts and electrical raceways, which must be functional following an earthquake, spanning between different buildings or structural systems shall be sufficiently flexible to withstand relative motion of support points assuming out-of-phase motions.

[14]Vibration isolators supporting equipment shall be designed for lateral loads or restrained from displacing laterally by other means. Restraint shall also be provided, which limits vertical displacement, such that lateral restraints do not become disengaged. a_p and R_p for equipment supported on vibration isolators shall be taken as 2.5 and 1.5, respectively, except that if the isolation mounting frame is supported by shallow or expansion anchors, the design forces for the anchors calculated by Formula (32-1), (32-2) or (32-3) shall be additionally multiplied by a factor of 2.0.

[15]Equipment anchorage shall not be designed such that lateral loads are resisted by gravity friction (e.g., friction clips).

[16]Expansion anchors, which are required to resist seismic loads in tension, shall not be used where operational vibrating loads are present.

[17]Movement of components within electrical cabinets, rack- and skid-mounted equipment and portions of skid-mounted electromechanical equipment that may cause damage to other components by displacing, shall be restricted by attachment to anchored equipment or support frames.

[18]Batteries on racks shall be restrained against movement in all directions due to earthquake forces.

[19]Seismic restraints may include straps, chains, bolts, barriers or other mechanisms that prevent sliding, falling and breach of containment of flammable and toxic materials. Friction forces may not be used to resist lateral loads in these restraints unless positive uplift restraint is provided which ensures that the friction forces act continuously.

Principles of Dynamic Analysis- Response Spectrum:

TABLE 16-P—*R* AND Ω_o FACTORS FOR NONBUILDING STRUCTURES

STRUCTURE TYPE	*R*	Ω_o
1. Vessels, including tanks and pressurized spheres, on braced or unbraced legs.	2.2	2.0
2. Cast-in-place concrete silos and chimneys having walls continuous to the foundations.	3.6	2.0
3. Distributed mass cantilever structures such as stacks, chimneys, silos and skirt-supported vertical vessels.	2.9	2.0
4. Trussed towers (freestanding or guyed), guyed stacks and chimneys.	2.9	2.0
5. Cantilevered column-type structures.	2.2	2.0
6. Cooling towers.	3.6	2.0
7. Bins and hoppers on braced or unbraced legs.	2.9	2.0
8. Storage racks.	3.6	2.0
9. Signs and billboards.	3.6	2.0
10. Amusement structures and monuments.	2.2	2.0
11. All other self-supporting structures not otherwise covered.	2.9	2.0

Principles of Dynamic Analysis- Response Spectrum:

TABLE 16-Q—SEISMIC COEFFICIENT C_a

SOIL PROFILE TYPE	SEISMIC ZONE FACTOR, Z				
	Z = 0.075	Z = 0.15	Z = 0.2	Z = 0.3	Z = 0.4
S_A	0.06	0.12	0.16	0.24	$0.32N_a$
S_B	0.08	0.15	0.20	0.30	$0.40N_a$
S_C	0.09	0.18	0.24	0.33	$0.40N_a$
S_D	0.12	0.22	0.28	0.36	$0.44N_a$
S_E	0.19	0.30	0.34	0.36	$0.36N_a$
S_F	See Footnote 1				

[1]Site-specific geotechnical investigation and dynamic site response analysis shall be performed to determine seismic coefficients for Soil Profile Type S_F.

Principles of Dynamic Analysis- Response Spectrum:

TABLE 16-R—SEISMIC COEFFICIENT C_v

SOIL PROFILE TYPE	SEISMIC ZONE FACTOR, Z				
	Z = 0.075	Z = 0.15	Z = 0.2	Z = 0.3	Z = 0.4
S_A	0.06	0.12	0.16	0.24	$0.32N_v$
S_B	0.08	0.15	0.20	0.30	$0.40N_v$
S_C	0.13	0.25	0.32	0.45	$0.56N_v$
S_D	0.18	0.32	0.40	0.54	$0.64N_v$
S_E	0.26	0.50	0.64	0.84	$0.96N_v$
S_F	See Footnote 1				

[1]Site-specific geotechnical investigation and dynamic site response analysis shall be performed to determine seismic coefficients for Soil Profile Type S_F.

Principles of Dynamic Analysis- Response Spectrum:

TABLE 16-S—NEAR-SOURCE FACTOR N_7[1]

SEISMIC SOURCE TYPE	CLOSEST DISTANCE TO KNOWN SEISMIC SOURCE[2,3]		
	≤ 2 km	5 km	≥ 10 km
A	1.5	1.2	1.0
B	1.3	1.0	1.0
C	1.0	1.0	1.0

[1]The Near-Source Factor may be based on the linear interpolation of values for distances other than those shown in the table.

[2]The location and type of seismic sources to be used for design shall be established based on approved geotechnical data (e.g., most recent mapping of active faults by the United States Geological Survey or the California Division of Mines and Geology).

[3]The closest distance to seismic source shall be taken as the minimum distance between the site and the area described by the vertical projection of the source on the surface (i.e., surface projection of fault plane). The surface projection need not include portions of the source at depths of 10 km or greater. The largest value of the Near-Source Factor considering all sources shall be used for design.

Principles of Dynamic Analysis- Response Spectrum:

TABLE 16-T—NEAR-SOURCE FACTOR N_v[1]

SEISMIC SOURCE TYPE	CLOSEST DISTANCE TO KNOWN SEISMIC SOURCE[2,3]			
	≤ 2 km	5 km	10 km	≥ 15 km
A	2.0	1.6	1.2	1.0
B	1.6	1.2	1.0	1.0
C	1.0	1.0	1.0	1.0

[1]The Near-Source Factor may be based on the linear interpolation of values for distances other than those shown in the table.

[2]The location and type of seismic sources to be used for design shall be established based on approved geotechnical data (e.g., most recent mapping of active faults by the United States Geological Survey or the California Division of Mines and Geology).

[3]The closest distance to seismic source shall be taken as the minimum distance between the site and the area described by the vertical projection of the source on the surface (i.e., surface projection of fault plane). The surface projection need not include portions of the source at depths of 10 km or greater. The largest value of the Near-Source Factor considering all sources shall be used for design.

Equivalent Lateral Force Method (Static Method)- IBC2009:

The following information related to seismic loads shall be stated:

1. Seismic importance factor, I, and occupancy category
2. Mapped spectral response accelerations Ss and S1
3. Site class
4. Spectral response coefficients, S_{Ds} and S_{D1}
5. Seismic design category
6. Basic seismic- force- resisting system(s)
7. Design base shear
8. Seismic response coefficient (s), Cs
9. Response modification factor (s), R
10. Analysis procedure used

Design Parameters of Equivalent Lateral Force Method- IBC2009:

The design parameters that are used in this method are illustrated as following:

- **Site Class:**

A classification assigned to a site based on the type of soils present and their engineering properties; in accordance with **Table 1613.5.2**. When the soil properties are not known in sufficient detail to determine the site class, site class D shall be used unless the building official or geotechnical data determines that site class E or F soil is likely to be present at the site

Design Parameters of Equivalent Lateral Force Method- IBC2009:

- **Mapped acceleration parameters:**

The parameters S_s and S_1 shall be determined from the 0.2 and 1 second spectral response accelerations shown on country maps

Where S_1 is less than or equal to 0.04 and Ss is less than or equal 0.15, the structure is permitted to be assigned to seismic design category A

So,

S_1= the mapped spectral accelerations for a 1- second period

S_s= the mapped spectral accelerations for short period

Mapped Acceleration Parameters:

The maximum considered earthquake spectral response acceleration for short period, S_{MS}, and at 1-second period, S_{M1}, adjusted for site class effects shall be determined as follows:

$$S_{MS} = F_a S_s \qquad IBC\ 2009 \qquad 16.36$$

$$S_{M1} = F_v S_1 \qquad IBC\ 2009 \qquad 16.37$$

Where:

- F_a= site coefficient defined in **Table 1613.5.3 (1)**
- F_v= site coefficient defined in **Table 1613.5.3 (2)**

Five percent damped design spectral response acceleration at short periods, S_{D1}, and at 1-second period, S_{D1}, shall be determined from the following equations:

$$S_{DS} = \frac{2}{3} S_{MS} \qquad IBC\ 2009\ \ (16-39)$$

$$S_{D1} = \frac{2}{3} S_{M1} \qquad IBC\ 2009\ \ (16-39)$$

So,

- S_{MS}= the maximum considered earthquake spectral response accelerations for short period
- S_{M1}= the maximum considered earthquake spectral response accelerations for 1- second period

Design Parameters of Equivalent Lateral Force Method-IBC2009:

- **Seismic Design Category:**

  Structures classified as occupancy category I, II, III that are located where the mapped spectral response acceleration parameter at 1-second period, S_1, is greater than or equal to 0.75 shall be assigned to Seismic Design Category E.

  Structures classified as Occupancy Category IV that are located where the mapped spectral response acceleration parameter at 1-second, S_1, is greater than or equal to 0.75 shall be assigned to a seismic design category F.

  All other structures shall be assigned to a seismic design category based on their occupancy category and the design spectral response acceleration coefficients, S_{DS} and S_{D1} as shown in **Table 1613.5.6 (1)** and **1613.5.6 (2)**

Design Parameters of Equivalent Lateral Force Method-IBC2009:

- **Seismic base shear:**

The seismic base shear, V, in a given direction shall be determined in accordance with the following equation:

$$V = C_s W \qquad ASCE\ 7\ \ (12.8-1)$$

Where:

- C_s= the seismic response coefficient
- W= the effective seismic weight

Seismic Base Shear:

The seismic response coefficient, C_s, shall be determined by:

$$C_s = \frac{S_{DS}}{R/I_e}$$

Where:

- I_e= the importance factor determined from **section 11.5.1** ASCE 7
- R= the response modification factor in **Table 12-2-1** ASCE 7

Design Parameters of Equivalent Lateral Force Method- IBC2009:

- **Effective seismic weight:**

The effective seismic weight, W, of a structure shall include the dead load above the base and other loads above the base as listed below:

1. In areas used for storage, a minimum of 25% of the floor live load shall be included

- **Exceptions:**

a) Where the inclusion of storage loads adds no more than 5% to the effective seismic weight at that level, it need not be included in the effective seismic weight

b) Floor live load in public garages and open parking structures need not be included

Effective Seismic Weight:

2. The actual partition weight or a minimum weight of 0.48kN/m^2 of the floor area whichever is greater shall be included
3. Total operating weight of permanent equipment
4. Where the flat roof snow load, Pf, exceeds 30 psf (1.44kN/m^2), 20% of the uniform design snow load, regardless of actual roof slope
5. Weight of landscaping and other materials at roof gardens and similar area

Effective Seismic Weight:

The value of C_s need not exceed the following:

$$C_s = \frac{S_{D1}}{T\,(R/I_e)} \qquad for \quad T \leq T_L$$

$$C_s = \frac{S_{D1}T_L}{T^2\,(R/I_e)} \qquad for \quad T > T_L$$

C_s shall not be less than:

$$C_s = 0.044 S_{DS} I_e \geq 0.01$$

In addition, for structures located where S_1 is equal to or greater than 0.6 g, C_s shall not be less than

$$C_s = \frac{0.5 S_1}{(R/I_e)} \qquad ASCE \ \ (12.8-6)$$

Where:

- T= the fundamental period of the structure
- T_L= mapped long- period transition period determined in section 11.4.5.

Effective Seismic Weight:

- **Note (ASCE 7-10 12.8.1.3):**

For regular structures five stories or less above the base and with a period T, of 0.5 seconds or less, C_s is permitted to be calculated using a value of 1.5 for S_s.

Design parameters of equivalent lateral force method-IBC2009:

- **Period Determination:**

The calculated fundamental period, T, shall not exceed the product of the coefficient for upper limit on calculated period, Cu from **Table 12.8-1** and the approximate fundamental period, Ta, determined in accordance with **section 12.8.2.1**, or just use **section 12.8.2.1** ($T_a = C_t h_n^x$)

The approximate fundamental period Ta in seconds shall be determined from:

$$T_a = C_t(h_n)^x \qquad ASCE\ 7 - 10\ \ (12.8-7)$$

C_t and x are determined from **Table 12.8-2**

Period Determination:

Alternatively, it is permitted to determine the approximate fundamental period, T_a, from the following equation for structures not exceeding 12 stories above the base, where the seismic force-resisting system consists entirely of concrete or steel moment resisting frames and the average story height is at least 3m:

$$T_a = 0.1N$$

Where:

- N= number of stories above the base

Design Parameters of Equivalent Lateral Force Method- IBC2009:

- **Vertical distribution of seismic forces:**

The lateral seismic force F_x, included at any level shall be determined from the following equation:

$$F_x = C_{vx} V \qquad ASCE\ 7-10\ (12.8-11)$$

And

$$C_{vx} = \frac{w_x {h_x}^k}{\sum_{i=1}^{n} w_i {h_i}^k} \qquad ASCE\ 7-10\ (12.8-12)$$

Vertical Distribution of Seismic Forces:

Where:

- C_{vx}= vertical distribution factor
- V= total design lateral force or shear at base of structure
- w_i and w_x= the portion of the total effective seismic weight of the structure located or assigned to level i or x
- h_i and h_x= the height from the base to level i or x

Vertical Distribution of Seismic Forces:

Where:

- k= an exponent related to the structure period as follows:

1. For structures having a period of 0.5 seconds or less, k=1
2. For structures having a period of 2.5 seconds or more, k=2
3. For structures having a period between 0.5 seconds and 2.5 seconds, k shall be 2 or shall be determined by linear interpolation between 1 and 2

IBC 2009 (ASCE 7-10) Design Response Spectra:

Where a design response spectrum is required and site specific ground motion procedures are not used, the design response spectrum curve shall be developed as indicated in **Figure 2** below and as follows:

IBC 2009 (ASCE 7-10) Design Response Spectra:

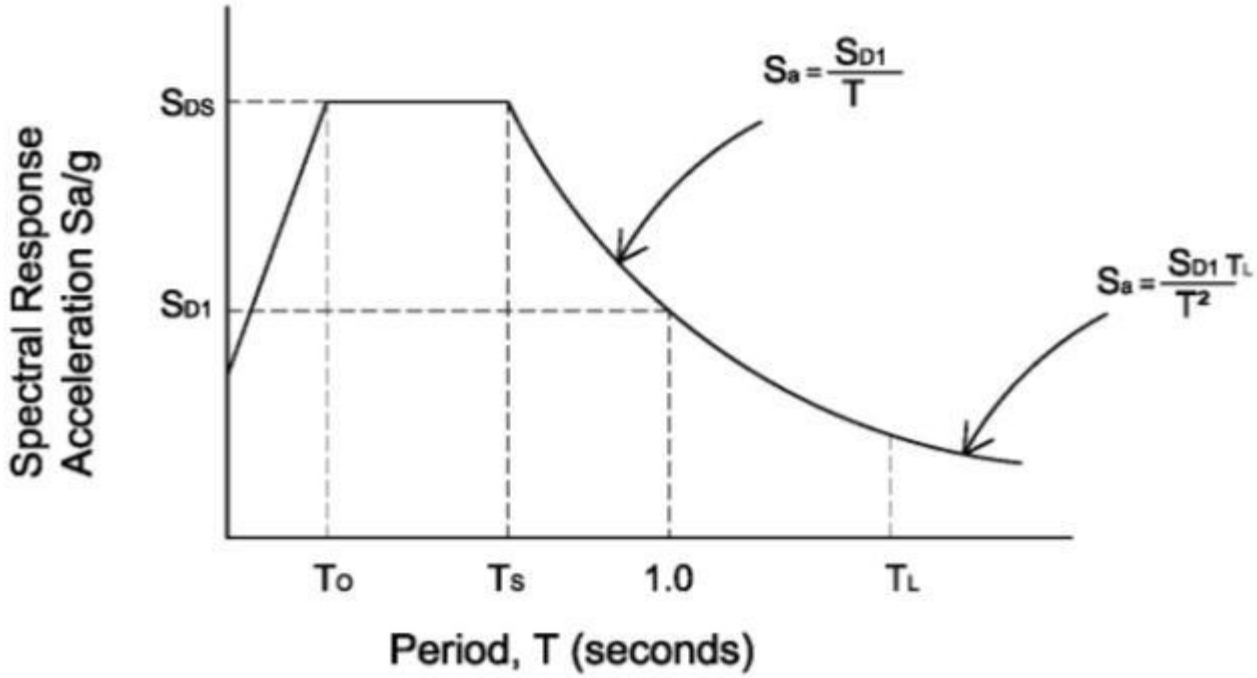

Figure 2: IBC 2009/ ASCE 7-10 Design Response Spectrum

IBC 2009 (ASCE 7-10) Design Response Spectra:

1. For periods less than T_o, the design spectral response acceleration, S_a, shall be taken as

$$S_a = S_{DS}\left(0.4 + 0.6\frac{T}{T_o}\right)$$

2. For periods greater than or equal to T_o and less than or equal to T_s, the design spectral response acceleration, S_a, shall be taken equal to S_{DS}

3. For periods greater than T_s, and less than or equal to T_L, the design spectral response acceleration, S_a, shall be taken as

$$S_a = \frac{S_{D1}}{T}$$

4. For periods greater than T_L, S_a shall be taken as

$$S_a = \frac{S_{D1}T_L}{T^2}$$

IBC 2009 (ASCE 7-10) Design Response Spectra:

Where:

- T= the fundamental period of the structure, seconds

$$T_o = \frac{0.2 S_{D1}}{S_{DS}}$$

$$T_s = \frac{S_{D1}}{S_{DS}}$$

- T_L= long- period transition period. [For USA, refer to **Figures 22-12 through 22-16** in ASCE 7-10)

IBC 2009 (ASCE 7-10) Design Response Spectra:

TABLE 1604.5
OCCUPANCY CATEGORY OF BUILDINGS AND OTHER STRUCTURES

OCCUPANCY CATEGORY	NATURE OF OCCUPANCY
I	Buildings and other structures that represent a low hazard to human life in the event of failure, including but not limited to: • Agricultural facilities. • Certain temporary facilities. • Minor storage facilities.
II	Buildings and other structures except those listed in Occupancy Categories I, III and IV
III	Buildings and other structures that represent a substantial hazard to human life in the event of failure, including but not limited to: • Buildings and other structures whose primary occupancy is public assembly with an occupant load greater than 300. • Buildings and other structures containing elementary school, secondary school or day care facilities with an occupant load greater than 250. • Buildings and other structures containing adult education facilities, such as colleges and universities with an occupant load greater than 500. • Group I-2 occupancies with an occupant load of 50 or more resident patients but not having surgery or emergency treatment facilities. • Group I-3 occupancies. • Any other occupancy with an occupant load greater than 5,000[a]. • Power-generating stations, water treatment facilities for potable water, waste water treatment facilities and other public utility facilities not included in Occupancy Category IV. • Buildings and other structures not included in Occupancy Category IV containing sufficient quantities of toxic or explosive substances to be dangerous to the public if released.

IBC 2009 (ASCE 7-10) Design Response Spectra:

OCCUPANCY CATEGORY	NATURE OF OCCUPANCY
IV	Buildings and other structures designated as essential facilities, including but not limited to: • Group I-2 occupancies having surgery or emergency treatment facilities. • Fire, rescue, ambulance and police stations and emergency vehicle garages. • Designated earthquake, hurricane or other emergency shelters. • Designated emergency preparedness, communications and operations centers and other facilities required for emergency response. • Power-generating stations and other public utility facilities required as emergency backup facilities for Occupancy Category IV structures. • Structures containing highly toxic materials as defined by Section 307 where the quantity of the material exceeds the maximum allowable quantities of Table 307.1(2). • Aviation control towers, air traffic control centers and emergency aircraft hangars. • Buildings and other structures having critical national defense functions. • Water storage facilities and pump structures required to maintain water pressure for fire suppression.

a. For purposes of occupant load calculation, occupancies required by Table 1004.1.1 to use gross floor area calculations shall be permitted to use net floor areas to determine the total occupant load.

IBC 2009 (ASCE 7-10) Design Response Spectra:

A

TABLE 1613.5.2
SITE CLASS DEFINITIONS

SITE CLASS	SOIL PROFILE NAME	AVERAGE PROPERTIES IN TOP 100 feet, SEE SECTION 1613.5.5		
		Soil shear wave velocity, $\bar{v}_s$, (ft/s)	Standard penetration resistance, $\bar{N}$	Soil undrained shear strength, $\bar{s}_u$, (psf)
A	Hard rock	$\bar{v}_s > 5{,}000$	N/A	N/A
B	Rock	$2{,}500 < \bar{v}_s \le 5{,}000$	N/A	N/A
C	Very dense soil and soft rock	$1{,}200 < \bar{v}_s \le 2{,}500$	$\bar{N} > 50$	$\bar{s}_u \ge 2{,}000$
D	Stiff soil profile	$600 \le \bar{v}_s \le 1{,}200$	$15 \le \bar{N} \le 50$	$1{,}000 \le \bar{s}_u \le 2{,}000$
E	Soft soil profile	$\bar{v}_s < 600$	$\bar{N} < 15$	$\bar{s}_u < 1{,}000$
E	—	Any profile with more than 10 feet of soil having the following characteristics: 1. Plasticity index $PI > 20$, 2. Moisture content $w \ge 40\%$, and 3. Undrained shear strength $\bar{s}_u < 500$ psf		
F	—	Any profile containing soils having one or more of the following characteristics: 1. Soils vulnerable to potential failure or collapse under seismic loading such as liquefiable soils, quick and highly sensitive clays, collapsible weakly cemented soils. 2. Peats and/or highly organic clays ($H > 10$ feet of peat and/or highly organic clay where H = thickness of soil) 3. Very high plasticity clays ($H > 25$ feet with plasticity index $PI > 75$) 4. Very thick soft/medium stiff clays ($H > 120$ feet)		

For SI: 1 foot = 304.8 mm, 1 square foot = 0.0929 m², 1 pound per square foot = 0.0479 kPa. N/A = Not applicable

B

TABLE 1613.5.3(1)
VALUES OF SITE COEFFICIENT F_a [a]

SITE CLASS	MAPPED SPECTRAL RESPONSE ACCELERATION AT SHORT PERIOD				
	$S_s \le 0.25$	$S_s = 0.50$	$S_s = 0.75$	$S_s = 1.00$	$S_s \ge 1.25$
A	0.8	0.8	0.8	0.8	0.8
B	1.0	1.0	1.0	1.0	1.0
C	1.2	1.2	1.1	1.0	1.0
D	1.6	1.4	1.2	1.1	1.0
E	2.5	1.7	1.2	0.9	0.9
F	Note b	Note b	Note b	Note b	Note b

a. Use straight-line interpolation for intermediate values of mapped spectral response acceleration at short period, S_s.
b. Values shall be determined in accordance with Section 11.4.7 of ASCE 7.

C

TABLE 1613.5.3(2)
VALUES OF SITE COEFFICIENT F_V [a]

SITE CLASS	MAPPED SPECTRAL RESPONSE ACCELERATION AT 1-SECOND PERIOD				
	$S_1 \le 0.1$	$S_1 = 0.2$	$S_1 = 0.3$	$S_1 = 0.4$	$S_1 \ge 0.5$
A	0.8	0.8	0.8	0.8	0.8
B	1.0	1.0	1.0	1.0	1.0
C	1.7	1.6	1.5	1.4	1.3
D	2.4	2.0	1.8	1.6	1.5
E	3.5	3.2	2.8	2.4	2.4
F	Note b	Note b	Note b	Note b	Note b

a. Use straight-line interpolation for intermediate values of mapped spectral response acceleration at 1-second period, S_1.
b. Values shall be determined in accordance with Section 11.4.7 of ASCE 7.

IBC 2009 (ASCE 7-10) Design Response Spectra:

TABLE 1613.5.6(1)
SEISMIC DESIGN CATEGORY BASED ON SHORT-PERIOD RESPONSE ACCELERATIONS

VALUE OF S_{DS}	OCCUPANCY CATEGORY		
	I or II	III	IV
$S_{DS} < 0.167g$	A	A	A
$0.167g \le S_{DS} < 0.33g$	B	B	C
$0.33g \le S_{DS} < 0.50g$	C	C	D
$0.50g \le S_{DS}$	D	D	D

TABLE 1613.5.6(2)
SEISMIC DESIGN CATEGORY BASED ON 1-SECOND PERIOD RESPONSE ACCELERATION

VALUE OF S_{D1}	OCCUPANCY CATEGORY		
	I or II	III	IV
$S_{D1} < 0.067g$	A	A	A
$0.067g \le S_{D1} < 0.133g$	B	B	C
$0.133g \le S_{D1} < 0.20g$	C	C	D
$0.20g \le S_{D1}$	D	D	D

IBC 2009 (ASCE 7-10) Design Response Spectra:

Table 1.5-1 Risk Category of Buildings and Other Structures for Flood, Wind, Snow, Earthquake, and Ice Loads

Use or Occupancy of Buildings and Structures	Risk Category
Buildings and other structures that represent a low risk to human life in the event of failure	I
All buildings and other structures except those listed in Risk Categories I, III, and IV	II
Buildings and other structures, the failure of which could pose a substantial risk to human life.	III
Buildings and other structures, not included in Risk Category IV, with potential to cause a substantial economic impact and/or mass disruption of day-to-day civilian life in the event of failure.	
Buildings and other structures not included in Risk Category IV (including, but not limited to, facilities that manufacture, process, handle, store, use, or dispose of such substances as hazardous fuels, hazardous chemicals, hazardous waste, or explosives) containing toxic or explosive substances where their quantity exceeds a threshold quantity established by the authority having jurisdiction and is sufficient to pose a threat to the public if released.	
Buildings and other structures designated as essential facilities.	IV
Buildings and other structures, the failure of which could pose a substantial hazard to the community.	
Buildings and other structures (including, but not limited to, facilities that manufacture, process, handle, store, use, or dispose of such substances as hazardous fuels, hazardous chemicals, or hazardous waste) containing sufficient quantities of highly toxic substances where the quantity exceeds a threshold quantity established by the authority having jurisdiction to be dangerous to the public if released and is sufficient to pose a threat to the public if released.[a]	
Buildings and other structures required to maintain the functionality of other Risk Category IV structures.	

[a]Buildings and other structures containing toxic, highly toxic, or explosive substances shall be eligible for classification to a lower Risk Category if it can be demonstrated to the satisfaction of the authority having jurisdiction by a hazard assessment as described in Section 1.5.2 that a release of the substances is commensurate with the risk associated with that Risk Category.

IBC 2009 (ASCE 7-10) Design Response Spectra:

Table 1.5-2 Importance Factors by Risk Category of Buildings and Other Structures for Snow, Ice, and Earthquake Loads[a]

Risk Category from Table 1.5-1	Snow Importance Factor, I_s	Ice Importance Factor—Thickness, I_i	Ice Importance Factor—Wind, I_w	Seismic Importance Factor, I_e
I	0.80	0.80	1.00	1.00
II	1.00	1.00	1.00	1.00
III	1.10	1.25	1.00	1.25
IV	1.20	1.25	1.00	1.50

[a]The component importance factor, I_p, applicable to earthquake loads, is not included in this table because it is dependent on the importance of the individual component rather than that of the building as a whole, or its occupancy. Refer to Section 13.1.3.

IBC 2009 (ASCE 7-10) Design Response Spectra:

Table 12.2-1 Design Coefficients and Factors for Seismic Force-Resisting Systems

Seismic Force-Resisting System	ASCE 7 Section Where Detailing Requirements Are Specified	Response Modification Coefficient, R[a]	Overstrength Factor, Ω_0[g]	Deflection Amplification Factor, C_d[b]	Structural System Limitations Including Structural Height, h_n (ft) Limits[c] Seismic Design Category				
					B	C	D[d]	E[d]	F[e]
A. BEARING WALL SYSTEMS									
1. Special reinforced concrete shear walls[l, m]	14.2	5	2½	5	NL	NL	160	160	100
2. Ordinary reinforced concrete shear walls[l]	14.2	4	2½	4	NL	NL	NP	NP	NP
3. Detailed plain concrete shear walls[l]	14.2	2	2½	2	NL	NP	NP	NP	NP
4. Ordinary plain concrete shear walls[l]	14.2	1½	2½	1½	NL	NP	NP	NP	NP
5. Intermediate precast shear walls [l]	14.2	4	2½	4	NL	NL	40[k]	40[k]	40[k]
6. Ordinary precast shear walls[l]	14.2	3	2½	3	NL	NP	NP	NP	NP
7. Special reinforced masonry shear walls	14.4	5	2½	3½	NL	NL	160	160	100
8. Intermediate reinforced masonry shear walls	14.4	3½	2½	2¼	NL	NL	NP	NP	NP
9. Ordinary reinforced masonry shear walls	14.4	2	2½	1¾	NL	160	NP	NP	NP
10. Detailed plain masonry shear walls	14.4	2	2½	1¾	NL	NP	NP	NP	NP
11. Ordinary plain masonry shear walls	14.4	1½	2½	1¼	NL	NP	NP	NP	NP
12. Prestressed masonry shear walls	14.4	1½	2½	1¾	NL	NP	NP	NP	NP
13. Ordinary reinforced AAC masonry shear walls	14.4	2	2½	2	NL	35	NP	NP	NP
14. Ordinary plain AAC masonry shear walls	14.4	1½	2½	1½	NL	NP	NP	NP	NP
15. Light-frame (wood) walls sheathed with wood structural panels rated for shear resistance or steel sheets	14.1 and 14.5	6½	3	4	NL	NL	65	65	65
16. Light-frame (cold-formed steel) walls sheathed with wood structural panels rated for shear resistance or steel sheets	14.1	6½	3	4	NL	NL	65	65	65
17. Light-frame walls with shear panels of all other materials	14.1 and 14.5	2	2½	2	NL	NL	35	NP	NP
18. Light-frame (cold-formed steel) wall systems using flat strap bracing	14.1	4	2	3½	NL	NL	65	65	65
B. BUILDING FRAME SYSTEMS									
1. Steel eccentrically braced frames	14.1	8	2	4	NL	NL	160	160	100
2. Steel special concentrically braced frames	14.1	6	2	5	NL	NL	160	160	100
3. Steel ordinary concentrically braced frames	14.1	3¼	2	3¼	NL	NL	35[j]	35[j]	NP[j]

Continued

IBC 2009 (ASCE 7-10) Design Response Spectra:

Table 12.2-1 (*Continued*)

Seismic Force-Resisting System	ASCE 7 Section Where Detailing Requirements Are Specified	Response Modification Coefficient, R[a]	Overstrength Factor, Ω_0[g]	Deflection Amplification Factor, C_d[b]	Structural System Limitations Including Structural Height, h_n (ft) Limits[c] Seismic Design Category				
					B	C	D[d]	E[d]	F[e]
4. Special reinforced concrete shear walls[l,m]	14.2	6	2½	5	NL	NL	160	160	100
5. Ordinary reinforced concrete shear walls[l]	14.2	5	2½	4½	NL	NL	NP	NP	NP
6. Detailed plain concrete shear walls[l]	14.2 and 14.2.2.8	2	2½	2	NL	NP	NP	NP	NP
7. Ordinary plain concrete shear walls[l]	14.2	1½	2½	1½	NL	NP	NP	NP	NP
8. Intermediate precast shear walls[l]	14.2	5	2½	4½	NL	NL	40[k]	40[k]	40[k]
9. Ordinary precast shear walls[l]	14.2	4	2½	4	NL	NP	NP	NP	NP
10. Steel and concrete composite eccentrically braced frames	14.3	8	2 ½	4	NL	NL	160	160	100
11. Steel and concrete composite special concentrically braced frames	14.3	5	2	4½	NL	NL	160	160	100
12. Steel and concrete composite ordinary braced frames	14.3	3	2	3	NL	NL	NP	NP	NP
13. Steel and concrete composite plate shear walls	14.3	6½	2½	5½	NL	NL	160	160	100
14. Steel and concrete composite special shear walls	14.3	6	2½	5	NL	NL	160	160	100
15. Steel and concrete composite ordinary shear walls	14.3	5	2½	4½	NL	NL	NP	NP	NP
16. Special reinforced masonry shear walls	14.4	5½	2½	4	NL	NL	160	160	100
17. Intermediate reinforced masonry shear walls	14.4	4	2½	4	NL	NL	NP	NP	NP
18. Ordinary reinforced masonry shear walls	14.4	2	2½	2	NL	160	NP	NP	NP
19. Detailed plain masonry shear walls	14.4	2	2½	2	NL	NP	NP	NP	NP
20. Ordinary plain masonry shear walls	14.4	1½	2½	1¼	NL	NP	NP	NP	NP
21. Prestressed masonry shear walls	14.4	1½	2½	1¾	NL	NP	NP	NP	NP
22. Light-frame (wood) walls sheathed with wood structural panels rated for shear resistance	14.5	7	2½	4½	NL	NL	65	65	65
23. Light-frame (cold-formed steel) walls sheathed with wood structural panels rated for shear resistance or steel sheets	14.1	7	2½	4½	NL	NL	65	65	65
24. Light-frame walls with shear panels of all other materials	14.1and 14.5	2½	2½	2½	NL	NL	35	NP	NP
25. Steel buckling-restrained braced frames	14.1	8	2½	5	NL	NL	160	160	100
26. Steel special plate shear walls	14.1	7	2	6	NL	NL	160	160	100

IBC 2009 (ASCE 7-10) Design Response Spectra:

Table 12.2-1 (*Continued*)

Seismic Force-Resisting System	ASCE 7 Section Where Detailing Requirements Are Specified	Response Modification Coefficient, R[a]	Overstrength Factor, Ω_0[g]	Deflection Amplification Factor, C_d[b]	Structural System Limitations Including Structural Height, h_n (ft) Limits[c] — Seismic Design Category				
					B	C	D[d]	E[d]	F[e]
C. MOMENT-RESISTING FRAME SYSTEMS									
1. Steel special moment frames	14.1 and 12.2.5.5	8	3	5½	NL	NL	NL	NL	NL
2. Steel special truss moment frames	14.1	7	3	5½	NL	NL	160	100	NP
3. Steel intermediate moment frames	12.2.5.7 and 14.1	4½	3	4	NL	NL	35[h]	NP[h]	NP[h]
4. Steel ordinary moment frames	12.2.5.6 and 14.1	3½	3	3	NL	NL	NP[i]	NP[i]	NP[i]
5. Special reinforced concrete moment frames[n]	12.2.5.5 and 14.2	8	3	5½	NL	NL	NL	NL	NL
6. Intermediate reinforced concrete moment frames	14.2	5	3	4½	NL	NL	NP	NP	NP
7. Ordinary reinforced concrete moment frames	14.2	3	3	2½	NL	NP	NP	NP	NP
8. Steel and concrete composite special moment frames	12.2.5.5 and 14.3	8	3	5½	NL	NL	NL	NL	NL
9. Steel and concrete composite intermediate moment frames	14.3	5	3	4½	NL	NL	NP	NP	NP
10. Steel and concrete composite partially restrained moment frames	14.3	6	3	5½	160	160	100	NP	NP
11. Steel and concrete composite ordinary moment frames	14.3	3	3	2½	NL	NP	NP	NP	NP
12. Cold-formed steel—special bolted moment frame[p]	14.1	3½	3[o]	3½	35	35	35	35	35
D. DUAL SYSTEMS WITH SPECIAL MOMENT FRAMES CAPABLE OF RESISTING AT LEAST 25% OF PRESCRIBED SEISMIC FORCES	12.2.5.1								
1. Steel eccentrically braced frames	14.1	8	2½	4	NL	NL	NL	NL	NL
2. Steel special concentrically braced frames	14.1	7	2½	5½	NL	NL	NL	NL	NL
3. Special reinforced concrete shear walls[l]	14.2	7	2½	5½	NL	NL	NL	NL	NL
4. Ordinary reinforced concrete shear walls[l]	14.2	6	2½	5	NL	NL	NP	NP	NP
5. Steel and concrete composite eccentrically braced frames	14.3	8	2½	4	NL	NL	NL	NL	NL
6. Steel and concrete composite special concentrically braced frames	14.3	6	2½	5	NL	NL	NL	NL	NL

Continued

IBC 2009 (ASCE 7-10) Design Response Spectra:

Table 12.2-1 (*Continued*)

Seismic Force-Resisting System	ASCE 7 Section Where Detailing Requirements Are Specified	Response Modification Coefficient, R[a]	Overstrength Factor, Ω_0[g]	Deflection Amplification Factor, C_d[b]	Structural System Limitations Including Structural Height, h_n (ft) Limits[c] Seismic Design Category				
					B	C	D[d]	E[d]	F[e]
7. Steel and concrete composite plate shear walls	14.3	7½	2½	6	NL	NL	NL	NL	NL
8. Steel and concrete composite special shear walls	14.3	7	2½	6	NL	NL	NL	NL	NL
9. Steel and concrete composite ordinary shear walls	14.3	6	2½	5	NL	NL	NP	NP	NP
10. Special reinforced masonry shear walls	14.4	5½	3	5	NL	NL	NL	NL	NL
11. Intermediate reinforced masonry shear walls	14.4	4	3	3½	NL	NL	NP	NP	NP
12. Steel buckling-restrained braced frames	14.1	8	2½	5	NL	NL	NL	NL	NL
13. Steel special plate shear walls	14.1	8	2½	6½	NL	NL	NL	NL	NL
E. DUAL SYSTEMS WITH INTERMEDIATE MOMENT FRAMES CAPABLE OF RESISTING AT LEAST 25% OF PRESCRIBED SEISMIC FORCES	12.2.5.1								
1. Steel special concentrically braced frames[f]	14.1	6	2½	5	NL	NL	35	NP	NP
2. Special reinforced concrete shear walls[f]	14.2	6½	2½	5	NL	NL	160	100	100
3. Ordinary reinforced masonry shear walls	14.4	3	3	2½	NL	160	NP	NP	NP
4. Intermediate reinforced masonry shear walls	14.4	3½	3	3	NL	NL	NP	NP	NP
5. Steel and concrete composite special concentrically braced frames	14.3	5½	2½	4½	NL	NL	160	100	NP
6. Steel and concrete composite ordinary braced frames	14.3	3½	2½	3	NL	NL	NP	NP	NP
7. Steel and concrete composite ordinary shear walls	14.3	5	3	4½	NL	NL	NP	NP	NP
8. Ordinary reinforced concrete shear walls[f]	14.2	5½	2½	4½	NL	NL	NP	NP	NP
F. SHEAR WALL-FRAME INTERACTIVE SYSTEM WITH ORDINARY REINFORCED CONCRETE MOMENT FRAMES AND ORDINARY REINFORCED CONCRETE SHEAR WALLS[f]	12.2.5.8 and 14.2	4½	2½	4	NL	NP	NP	NP	NP

IBC 2009 (ASCE 7-10) Design Response Spectra:

Table 12.2-1 (*Continued*)

Seismic Force-Resisting System	ASCE 7 Section Where Detailing Requirements Are Specified	Response Modification Coefficient, R[a]	Overstrength Factor, Ω_0[g]	Deflection Amplification Factor, C_d[b]	Structural System Limitations Including Structural Height, h_n (ft) Limits[c]				
					Seismic Design Category				
					B	C	D[d]	E[d]	F[e]
G. CANTILEVERED COLUMN SYSTEMS DETAILED TO CONFORM TO THE REQUIREMENTS FOR:	12.2.5.2								
1. Steel special cantilever column systems	14.1	2½	1¼	2½	35	35	35	35	35
2. Steel ordinary cantilever column systems	14.1	1¼	1¼	1¼	35	35	NP[i]	NP[i]	NP[i]
3. Special reinforced concrete moment frames[n]	12.2.5.5 and 14.2	2½	1¼	2½	35	35	35	35	35
4. Intermediate reinforced concrete moment frames	14.2	1½	1¼	1½	35	35	NP	NP	NP
5. Ordinary reinforced concrete moment frames	14.2	1	1¼	1	35	NP	NP	NP	NP
6. Timber frames	14.5	1½	1½	1½	35	35	35	NP	NP
H. STEEL SYSTEMS NOT SPECIFICALLY DETAILED FOR SEISMIC RESISTANCE, EXCLUDING CANTILEVER COLUMN SYSTEMS	14.1	3	3	3	NL	NL	NP	NP	NP

[a]Response modification coefficient, *R*, for use throughout the standard. Note *R* reduces forces to a strength level, not an allowable stress level.
[b]Deflection amplification factor, C_d, for use in Sections 12.8.6, 12.8.7, and 12.9.2.
[c]NL = Not Limited and NP = Not Permitted. For metric units use 30.5 m for 100 ft and use 48.8 m for 160 ft.
[d]See Section 12.2.5.4 for a description of seismic force-resisting systems limited to buildings with a structural height, h_n, of 240 ft (73.2 m) or less.
[e]See Section 12.2.5.4 for seismic force-resisting systems limited to buildings with a structural height, h_n, of 160 ft (48.8 m) or less.
[f]Ordinary moment frame is permitted to be used in lieu of intermediate moment frame for Seismic Design Categories B or C.
[g]Where the tabulated value of the overstrength factor, Ω_0, is greater than or equal to 2½, Ω_0 is permitted to be reduced by subtracting the value of 1/2 for structures with flexible diaphragms.
[h]See Section 12.2.5.7 for limitations in structures assigned to Seismic Design Categories D, E, or F.
[i]See Section 12.2.5.6 for limitations in structures assigned to Seismic Design Categories D, E, or F.
[j]Steel ordinary concentrically braced frames are permitted in single-story buildings up to a structural height, h_n, of 60 ft (18.3 m) where the dead load of the roof does not exceed 20 psf (0.96 kN/m^2) and in penthouse structures.
[k]An increase in structural height, h_n, to 45 ft (13.7 m) is permitted for single story storage warehouse facilities.
[l]In Section 2.2 of ACI 318. A shear wall is defined as a structural wall.
[m]In Section 2.2 of ACI 318. The definition of "special structural wall" includes precast and cast-in-place construction.
[n]In Section 2.2 of ACI 318. The definition of "special moment frame" includes precast and cast-in-place construction.
[o]Alternately, the seismic load effect with overstrength, E_{mh}, is permitted to be based on the expected strength determined in accordance with AISI S110.
[p]Cold-formed steel – special bolted moment frames shall be limited to one-story in height in accordance with AISI S110.

IBC 2009 (ASCE 7-10) Design Response Spectra:

Table 12.8-1 Coefficient for Upper Limit on Calculated Period

Design Spectral Response Acceleration Parameter at 1 s, S_{D1}	Coefficient C_u
≥ 0.4	1.4
0.3	1.4
0.2	1.5
0.15	1.6
≤ 0.1	1.7

IBC 2009 (ASCE 7-10) Design Response Spectra:

Table 12.8-2 Values of Approximate Period Parameters C_t and x

Structure Type	C_t	x
Moment-resisting frame systems in which the frames resist 100% of the required seismic force and are not enclosed or adjoined by components that are more rigid and will prevent the frames from deflecting where subjected to seismic forces:		
Steel moment-resisting frames	0.028 (0.0724)[a]	0.8
Concrete moment-resisting frames	0.016 (0.0466)[a]	0.9
Steel eccentrically braced frames in accordance with Table 12.2-1 lines B1 or D1	0.03 (0.0731)[a]	0.75
Steel buckling-restrained braced frames	0.03 (0.0731)[a]	0.75
All other structural systems	0.02 (0.0488)[a]	0.75

[a]Metric equivalents are shown in parentheses.

IBC 2009 (ASCE 7-10) Design Response Spectra:

Table 12.3-1 Horizontal Structural Irregularities

Type	Description	Reference Section	Seismic Design Category Application
1a.	**Torsional Irregularity:** Torsional irregularity is defined to exist where the maximum story drift, computed including accidental torsion with $A_x = 1.0$, at one end of the structure transverse to an axis is more than 1.2 times the average of the story drifts at the two ends of the structure. Torsional irregularity requirements in the reference sections apply only to structures in which the diaphragms are rigid or semirigid.	12.3.3.4 12.7.3 12.8.4.3 12.12.1 Table 12.6-1 Section 16.2.2	D, E, and F B, C, D, E, and F C, D, E, and F C, D, E, and F D, E, and F B, C, D, E, and F
1b.	**Extreme Torsional Irregularity:** Extreme torsional irregularity is defined to exist where the maximum story drift, computed including accidental torsion with $A_x = 1.0$, at one end of the structure transverse to an axis is more than 1.4 times the average of the story drifts at the two ends of the structure. Extreme torsional irregularity requirements in the reference sections apply only to structures in which the diaphragms are rigid or semirigid.	12.3.3.1 12.3.3.4 12.7.3 12.8.4.3 12.12.1 Table 12.6-1 Section 16.2.2	E and F D B, C, and D C and D C and D D B, C, and D
2.	**Reentrant Corner Irregularity:** Reentrant corner irregularity is defined to exist where both plan projections of the structure beyond a reentrant corner are greater than 15% of the plan dimension of the structure in the given direction.	12.3.3.4 Table 12.6-1	D, E, and F D, E, and F
3.	**Diaphragm Discontinuity Irregularity:** Diaphragm discontinuity irregularity is defined to exist where there is a diaphragm with an abrupt discontinuity or variation in stiffness, including one having a cutout or open area greater than 50% of the gross enclosed diaphragm area, or a change in effective diaphragm stiffness of more than 50% from one story to the next.	12.3.3.4 Table 12.6-1	D, E, and F D, E, and F
4.	**Out-of-Plane Offset Irregularity:** Out-of-plane offset irregularity is defined to exist where there is a discontinuity in a lateral force-resistance path, such as an out-of-plane offset of at least one of the vertical elements.	12.3.3.3 12.3.3.4 12.7.3 Table 12.6-1 Section 16.2.2	B, C, D, E, and F D, E, and F B, C, D, E, and F D, E, and F B, C, D, E, and F
5.	**Nonparallel System Irregularity:** Nonparallel system irregularity is defined to exist where vertical lateral force-resisting elements are not parallel to the major orthogonal axes of the seismic force-resisting system.	12.5.3 12.7.3 Table 12.6-1 Section 16.2.2	C, D, E, and F B, C, D, E, and F D, E, and F B, C, D, E, and F

IBC 2009 (ASCE 7-10) Design Response Spectra:

Table 12.3-2 Vertical Structural Irregularities

Type	Description	Reference Section	Seismic Design Category Application
1a.	**Stiffness-Soft Story Irregularity:** Stiffness-soft story irregularity is defined to exist where there is a story in which the lateral stiffness is less than 70% of that in the story above or less than 80% of the average stiffness of the three stories above.	Table 12.6-1	D, E, and F
1b.	**Stiffness-Extreme Soft Story Irregularity:** Stiffness-extreme soft story irregularity is defined to exist where there is a story in which the lateral stiffness is less than 60% of that in the story above or less than 70% of the average stiffness of the three stories above.	12.3.3.1 Table 12.6-1	E and F D, E, and F
2.	**Weight (Mass) Irregularity:** Weight (mass) irregularity is defined to exist where the effective mass of any story is more than 150% of the effective mass of an adjacent story. A roof that is lighter than the floor below need not be considered.	Table 12.6-1	D, E, and F
3.	**Vertical Geometric Irregularity:** Vertical geometric irregularity is defined to exist where the horizontal dimension of the seismic force-resisting system in any story is more than 130% of that in an adjacent story.	Table 12.6-1	D, E, and F
4.	**In-Plane Discontinuity in Vertical Lateral Force-Resisting Element Irregularity:** In-plane discontinuity in vertical lateral force-resisting elements irregularity is defined to exist where there is an in-plane offset of a vertical seismic force-resisting element resulting in overturning demands on a supporting beam, column, truss, or slab.	12.3.3.3 12.3.3.4 Table 12.6-1	B, C, D, E, and F D, E, and F D, E, and F
5a.	**Discontinuity in Lateral Strength–Weak Story Irregularity:** Discontinuity in lateral strength–weak story irregularity is defined to exist where the story lateral strength is less than 80% of that in the story above. The story lateral strength is the total lateral strength of all seismic-resisting elements sharing the story shear for the direction under consideration.	12.3.3.1 Table 12.6-1	E and F D, E, and F
5b.	**Discontinuity in Lateral Strength–Extreme Weak Story Irregularity:** Discontinuity in lateral strength–extreme weak story irregularity is defined to exist where the story lateral strength is less than 65% of that in the story above. The story strength is the total strength of all seismic-resisting elements sharing the story shear for the direction under consideration.	12.3.3.1 12.3.3.2 Table 12.6-1	D, E, and F B and C D, E, and F

Example 1: Intermediate Moment Resisting Frames Lateral Force Resisting System

Figure 3 below shows the frames layout of an office building. Given:

- Number of stories = five
- Story height= 3.5m
- Materials: concrete cylinder compressive strength at 28 days, f'_c= 28MPa
- Steel yield strength, fy= 420MPa
- Soil: soft rock, S_c type in accordance with UBC 97 provisions. Site class C in accordance with IBC 2009
- All columns are square with side length equals to 500mm
- All beams are 300mm section width and 600mm total thickness

Example 1: Intermediate Moment Resisting Frames Lateral Force Resisting System

- The slab is one way solid slab of 200mm thickness
- Shear walls thickness is 250mm (Not for this example, used in next examples)
- The live load is 3kN/m^2
- The superimposed dead load is 4kN/m^2
- The perimeter wall weight is 3kN/m
- Importance factor =1
- Zone factor: Z=0.2 in UBC 97, C_a= 0.24, C_v= 0.32
- On lack of a map of spectral accelerations of S_1 and S_S, the following can be assumed: S_1= 1.25 Z S_S= 2.5 Z (amendment no. 3 to SI 413 (2009)).

Principles of Dynamic Analysis- Response Spectrum:

TABLE 16-Q—SEISMIC COEFFICIENT C_a

SOIL PROFILE TYPE	SEISMIC ZONE FACTOR, Z				
	$Z = 0.075$	$Z = 0.15$	$Z = 0.2$	$Z = 0.3$	$Z = 0.4$
S_A	0.06	0.12	0.16	0.24	$0.32N_a$
S_B	0.08	0.15	0.20	0.30	$0.40N_a$
S_C	0.09	0.18	0.24	0.33	$0.40N_a$
S_D	0.12	0.22	0.28	0.36	$0.44N_a$
S_E	0.19	0.30	0.34	0.36	$0.36N_a$
S_F	See Footnote 1				

[1]Site-specific geotechnical investigation and dynamic site response analysis shall be performed to determine seismic coefficients for Soil Profile Type S_F.

Principles of Dynamic Analysis- Response Spectrum:

TABLE 16-R—SEISMIC COEFFICIENT C_v

SOIL PROFILE TYPE	SEISMIC ZONE FACTOR, Z				
	$Z = 0.075$	$Z = 0.15$	$Z = 0.2$	$Z = 0.3$	$Z = 0.4$
S_A	0.06	0.12	0.16	0.24	$0.32N_v$
S_B	0.08	0.15	0.20	0.30	$0.40N_v$
S_C	0.13	0.25	0.32	0.45	$0.56N_v$
S_D	0.18	0.32	0.40	0.54	$0.64N_v$
S_E	0.26	0.50	0.64	0.84	$0.96N_v$
S_F	See Footnote 1				

[1]Site-specific geotechnical investigation and dynamic site response analysis shall be performed to determine seismic coefficients for Soil Profile Type S_F.

Example 1: Intermediate moment resisting frames lateral force resisting system

Determine the seismic lateral forces in each frame at floor levels using UBC 97 and IBC 2009 Code provisions

Example 1: Intermediate moment resisting frames lateral force resisting system

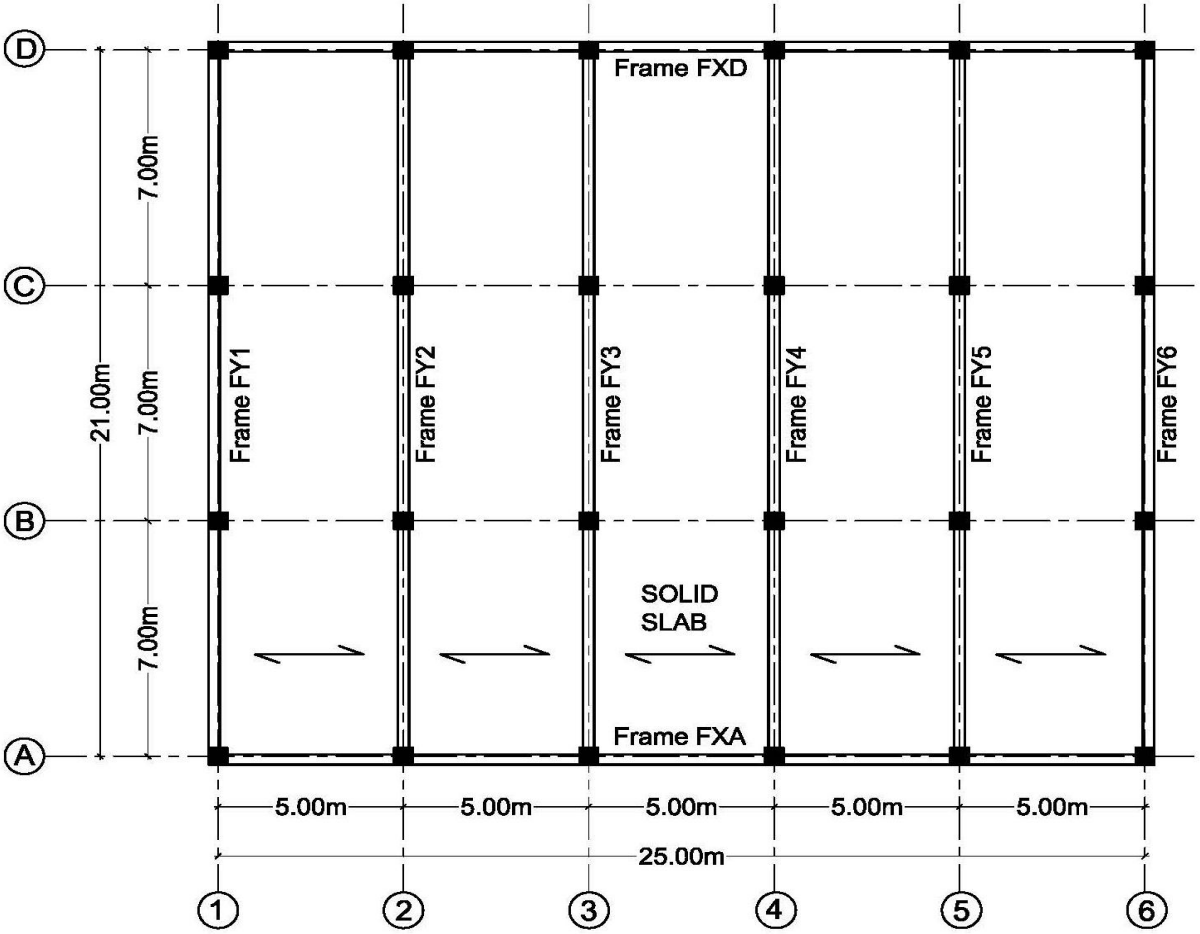

Figure 3: Frames layout

Solution- UBC 97:

- ***Step 1: weight of the building***

Solid slab own weight= slab thickness x unit weight of concrete

$W_D = 0.20 \times 25 = 5kN/m^2$

$W_{slab} = 25 \times 21 \times 5 = 2625kN$

Beams weight= length of beams x cross section area x unit weight of concrete

$W_{beams} = (21 \times 6 + 25 \times 2)(0.30 \times 0.40 \times 25) = 528kN$

It shall be noted that the beam depth below slab is used which is 0.60-0.20= 0.40m

Solution- UBC 97:

- ***Step 1: weight of the building***

Columns weight= length of columns x cross section area x unit weight of concrete

$$W_{columns} = 2.9 \times 24 \times 0.50 \times 0.50 \times 25 = 435kN$$

Perimeter wall weight= length of wall x weight of wall/m

$$W_{walls} = (25 \times 2 + 21 \times 2)(3) = 276kN$$

Superimposed dead load on slab= area of slab x superimposed dead load/m^2

$$W_{superimposed} = 25 \times 21 \times 4 = 2100kN$$

Total weight of one story= 5964kN

Total weight of building= 5964 x 5= 29820kN

Solution- UBC 97:

- ***Step 2: base shear***

Building period:

$$T = C_t(h_n)^{\frac{3}{4}}$$

$$h_n = 5\ floors\ \times\ 3.5 = 17.5m$$

$$C_t = 0.0731$$

$$T = 0.0731(17.5)^{\frac{3}{4}} = 0.625\ seconds$$

0.32

- ***Step 2: base shear***

Notice that the stiffness, k, which is the force divided by the lateral deformation, varies in each direction. But, in this example use this period, T, in both directions.

The base shear, V, is computed as follows:

R= 5.5 from **Table16-N** (intermediate moment resisting frame)

$$V = \frac{C_v I}{RT} W \qquad V = \frac{0.31 \times 1}{5.5 \times 0.625} W = 0.093W$$

Solution- UBC 97:

- ***Step 2: base shear***

The base shear, V, need not exceed

$$V = \frac{2.5 C_a I}{R} W$$

$$V = \frac{2.5 \times 0.24 \times 1}{5.5} W = 0.109W > 0.093W$$

The base shear shall not be less than

$$V = 0.11 C_a I W$$

$$V = 0.11 \times 0.24 \times 1 \times W = 0.026W \quad < 0.093W$$

So, total base shear will be

$$V = 0.093 \times 29820 = 2773kN$$

Since, T <0.7 seconds, F_t=0.0 kN

Solution- UBC 97:

- ***Step 3: vertical distribution of base shear***

$$F_x = \frac{(V - F_t) w_x h_x}{\sum_{i=1}^{n} w_i h_i}$$

$$F_x = \frac{w_x x h}{w_x (1h + 2h + 3h + 4h + 5h)} = \frac{x}{15}$$

Where x is the number of the story. **Table 1** shows a summary of distribution of forces for the stories.

Solution- UBC 97:

- ***Step 3: vertical distribution of base shear***

Table 1: Distribution of forces to stories

Story	w_x (kN)	h_x (m)	$w_x h_x$ (kN.m)	F_x (kN)
5	5964	17.5	104370	(5/15) V= 924
4	5964	14	83496	(4/15) V= 739
3	5964	10.5	62622	(3/15) V= 555
2	5964	7	41748	(2/15) V= 370
1	5964	3.5	20874	(1/15) V= 185
0	5964	0	0	0
			313110 kN.m	2773 kN

Solution- UBC 97:

- ***Step 4: Horizontal Distribution of Story Shear to Frames***

The slab is assumed to be rigid, thus the force in each story is distributed equally to the frames. If the slab is not rigid or flexible, the force in each story is distributed to the frames based on tributary area principle. **Table 2** summarizes the force distribution to the frames in x and y directions.

Solution- UBC 97:

- ***Step 4: Horizontal Distribution of Story Shear to Frames***

Table 2: Distribution of forces to frames

Story	h_x (m)	Forces to frames in y direction FY1 to FY6 V/6	Forces to frames in X direction FXA , FXD V/2
5	17.5	154	462
4	14	123	370
3	10.5	93	278
2	7	62	185
1	3.5	31	93
0	0	0	0
sum		463kN	1388kN

Solution- UBC 97:

- ***Step 4: horizontal distribution of story shear to frames***

The force in each frame of y- direction is

$$\frac{V}{6} = \frac{2773}{6} = 462kN$$

The force in each frame of x- direction is

$$\frac{V}{2} = \frac{2773}{2} = 1387kN$$

- ***Step 4: horizontal distribution of story shear to frames***

If 5% eccentricity is assumed to base shear in y-direction; parallel to frames FY1 to FY6, then, for y-direction

$$V_{yi} = \frac{K_{yi}}{\sum K_{yi}} V_y \mp \frac{K_{yi} X_i}{K_t} V_y e$$

$$K_t = \sum K_{yi} {X_i}^2 + \sum K_{xi} {Y_i}^2$$

Solution- UBC 97:

- ***Step 4: horizontal distribution of story shear to frames***

Where:

- V_{yi}= shear force to frame i
- V_y= shear force
- K_{yi}= stiffness of frame i
- X_i= distance from frame i to center of stiffness of the floor in x-direction
- Y_i= distance from frame i to center of stiffness of the floor in y-direction
- e= eccentricity
- K_t= torsional stiffness of resisting frames

Solution- UBC 97:

- ***Step 4: horizontal distribution of story shear to frames***

Assume that the frames that resist the direct base shear and the torsional moment due to the assumed eccentricity, are frames FY1 to FY6 only; in y- direction.

Let the stiffness of each frame be K, so

$$\sum K_{yi} = 6K$$

$$e = 0.05 \times 25 = 1.25m$$

$$K_t = 2(K(2.5)^2 + K(7.5)^2 + K(12.5)^2) = 437.5K$$

- ***Step 4: horizontal distribution of story shear to frames***

So, for frame FY1 or FY6

$$V_{y1,6} = \frac{K}{6K}V_y + \frac{K(12.5)}{437.5K}V_y(1.25) = 0.167V_y + 0.036V_y$$

$$= 0.203V_y$$

$$0.203V_y = 0.203(2773) = 563kN$$

It should be noted that the force is increased on the frame by

$$\frac{563}{462} = 1.22 \qquad 22\% \qquad increase$$

Solution- IBC 2009:

- ***Step 1: weight of the building***

Total weight of one story= 5964kN

Total weight of building= 5964 x 5= 29820kN

- ***Step 2: base shear***

Building period

$$T_a = C_t(h_n)^x \qquad C_t = 0.0466\ ,$$

$$X = 0.9 \qquad Table\ 12.8-2 \quad ASCE\ 7-10$$

$$T_a = 0.0466(17.5)^{2} = 0.613\ seconds$$

The maximum considered earthquake spectral response accelerations are

- $S_{MS} = F_a S_s$
- $S_{M1} = F_v S_1$

0.9

IBC 2009 (ASCE 7-10) Design Response Spectra:

Table 12.8-2 Values of Approximate Period Parameters C_t and x

Structure Type	C_t	x
Moment-resisting frame systems in which the frames resist 100% of the required seismic force and are not enclosed or adjoined by components that are more rigid and will prevent the frames from deflecting where subjected to seismic forces:		
Steel moment-resisting frames	0.028 (0.0724)[a]	0.8
Concrete moment-resisting frames	0.016 (0.0466)[a]	0.9
Steel eccentrically braced frames in accordance with Table 12.2-1 lines B1 or D1	0.03 (0.0731)[a]	0.75
Steel buckling-restrained braced frames	0.03 (0.0731)[a]	0.75
All other structural systems	0.02 (0.0488)[a]	0.75

[a]Metric equivalents are shown in parentheses.

Solution- IBC 2009:

- ***Step 2: base shear***

Site class: C

- $S_s = 2.5 \times 0.2 = 0.5$
- $S_1 = 1.25 \times 0.2 = 0.25$

From Table 1613.5.3 (1), F_a=1.2

From Table 1613.3 (2), F_v=1.55

So,

$$S_{MS} = 1.2 \times 0.5 = 0.6$$
$$S_{M1} = 1.55 \times 0.25 = 0.388$$

- ***Step 2: base shear***

For 5% damping:

$$S_{DS} = \frac{2}{3} S_{MS} = \frac{2}{3} \times 0.6 = 0.4$$
$$S_{D1} = \frac{2}{3} S_{M1} = \frac{2}{3} \times 0.388 = 0.26$$

Seismic design category: occupancy category is II from **Table 1604.5** IBC 2009

From **Table 1613.5.6 (1)**, the seismic design category is C

From **Table 1613.5.6 (2)**, the seismic design category is D

So, the seismic design category is D

B

TABLE 1613.5.3(1)
VALUES OF SITE COEFFICIENT F_a [a]

SITE CLASS	MAPPED SPECTRAL RESPONSE ACCELERATION AT SHORT PERIOD				
	$S_s \le 0.25$	$S_s = 0.50$	$S_s = 0.75$	$S_s = 1.00$	$S_s \ge 1.25$
A	0.8	0.8	0.8	0.8	0.8
B	1.0	1.0	1.0	1.0	1.0
C	1.2	1.2	1.1	1.0	1.0
D	1.6	1.4	1.2	1.1	1.0
E	2.5	1.7	1.2	0.9	0.9
F	Note b	Note b	Note b	Note b	Note b

a. Use straight-line interpolation for intermediate values of mapped spectral response acceleration at short period, S_s.
b. Values shall be determined in accordance with Section 11.4.7 of ASCE 7.

C

TABLE 1613.5.3(2)
VALUES OF SITE COEFFICIENT F_V [a]

SITE CLASS	MAPPED SPECTRAL RESPONSE ACCELERATION AT 1-SECOND PERIOD				
	$S_1 \leq 0.1$	$S_1 = 0.2$	$S_1 = 0.3$	$S_1 = 0.4$	$S_1 \geq 0.5$
A	0.8	0.8	0.8	0.8	0.8
B	1.0	1.0	1.0	1.0	1.0
C	1.7	1.6	1.5	1.4	1.3
D	2.4	2.0	1.8	1.6	1.5
E	3.5	3.2	2.8	2.4	2.4
F	Note b	Note b	Note b	Note b	Note b

a. Use straight-line interpolation for intermediate values of mapped spectral response acceleration at 1-second period, S_1.
b. Values shall be determined in accordance with Section 11.4.7 of ASCE 7.

IBC 2009 (ASCE 7-10) Design Response Spectra:

TABLE 1613.5.6(1)
SEISMIC DESIGN CATEGORY BASED ON
SHORT-PERIOD RESPONSE ACCELERATIONS

VALUE OF S_{DS}	OCCUPANCY CATEGORY		
	I or II	III	IV
$S_{DS} < 0.167g$	A	A	A
$0.167g \le S_{DS} < 0.33g$	B	B	C
$0.33g \le S_{DS} < 0.50g$	C	C	D
$0.50g \le S_{DS}$	D	D	D

TABLE 1613.5.6(2)
SEISMIC DESIGN CATEGORY BASED ON
1-SECOND PERIOD RESPONSE ACCELERATION

VALUE OF S_{D1}	OCCUPANCY CATEGORY		
	I or II	III	IV
$S_{D1} < 0.067g$	A	A	A
$0.067g \le S_{D1} < 0.133g$	B	B	C
$0.133g \le S_{D1} < 0.20g$	C	C	D
$0.20g \le S_{D1}$	D	D	D

IBC 2009 (ASCE 7-10) Design Response Spectra:

Table 12.8-2 Values of Approximate Period Parameters C_t and x

Structure Type	C_t	x
Moment-resisting frame systems in which the frames resist 100% of the required seismic force and are not enclosed or adjoined by components that are more rigid and will prevent the frames from deflecting where subjected to seismic forces:		
Steel moment-resisting frames	0.028 (0.0724)[a]	0.8
Concrete moment-resisting frames	0.016 (0.0466)[a]	0.9
Steel eccentrically braced frames in accordance with Table 12.2-1 lines B1 or D1	0.03 (0.0731)[a]	0.75
Steel buckling-restrained braced frames	0.03 (0.0731)[a]	0.75
All other structural systems	0.02 (0.0488)[a]	0.75

[a]Metric equivalents are shown in parentheses.

IBC 2009 (ASCE 7-10) Design Response Spectra:

Table 1.5-1 Risk Category of Buildings and Other Structures for Flood, Wind, Snow, Earthquake, and Ice Loads

Use or Occupancy of Buildings and Structures	Risk Category
Buildings and other structures that represent a low risk to human life in the event of failure	I
All buildings and other structures except those listed in Risk Categories I, III, and IV	II
Buildings and other structures, the failure of which could pose a substantial risk to human life.	III
Buildings and other structures, not included in Risk Category IV, with potential to cause a substantial economic impact and/or mass disruption of day-to-day civilian life in the event of failure.	
Buildings and other structures not included in Risk Category IV (including, but not limited to, facilities that manufacture, process, handle, store, use, or dispose of such substances as hazardous fuels, hazardous chemicals, hazardous waste, or explosives) containing toxic or explosive substances where their quantity exceeds a threshold quantity established by the authority having jurisdiction and is sufficient to pose a threat to the public if released.	
Buildings and other structures designated as essential facilities.	IV
Buildings and other structures, the failure of which could pose a substantial hazard to the community.	
Buildings and other structures (including, but not limited to, facilities that manufacture, process, handle, store, use, or dispose of such substances as hazardous fuels, hazardous chemicals, or hazardous waste) containing sufficient quantities of highly toxic substances where the quantity exceeds a threshold quantity established by the authority having jurisdiction to be dangerous to the public if released and is sufficient to pose a threat to the public if released.[a]	
Buildings and other structures required to maintain the functionality of other Risk Category IV structures.	

[a]Buildings and other structures containing toxic, highly toxic, or explosive substances shall be eligible for classification to a lower Risk Category if it can be demonstrated to the satisfaction of the authority having jurisdiction by a hazard assessment as described in Section 1.5.2 that a release of the substances is commensurate with the risk associated with that Risk Category.

IBC 2009 (ASCE 7-10) Design Response Spectra:

Table 1.5-2 Importance Factors by Risk Category of Buildings and Other Structures for Snow, Ice, and Earthquake Loads[a]

Risk Category from Table 1.5-1	Snow Importance Factor, I_s	Ice Importance Factor—Thickness, I_i	Ice Importance Factor—Wind, I_w	Seismic Importance Factor, I_e
I	0.80	0.80	1.00	1.00
II	1.00	1.00	1.00	1.00
III	1.10	1.25	1.00	1.25
IV	1.20	1.25	1.00	1.50

[a]The component importance factor, I_p, applicable to earthquake loads, is not included in this table because it is dependent on the importance of the individual component rather than that of the building as a whole, or its occupancy. Refer to Section 13.1.3.

IBC 2009 (ASCE 7-10) Design Response Spectra:

Table 12.2-1 Design Coefficients and Factors for Seismic Force-Resisting Systems

Seismic Force-Resisting System	ASCE 7 Section Where Detailing Requirements Are Specified	Response Modification Coefficient, R[a]	Overstrength Factor, Ω_0[g]	Deflection Amplification Factor, C_d[b]	Structural System Limitations Including Structural Height, h_n (ft) Limits[c] — Seismic Design Category				
					B	C	D[d]	E[d]	F[e]
A. BEARING WALL SYSTEMS									
1. Special reinforced concrete shear walls[l, m]	14.2	5	2½	5	NL	NL	160	160	100
2. Ordinary reinforced concrete shear walls[l]	14.2	4	2½	4	NL	NL	NP	NP	NP
3. Detailed plain concrete shear walls[l]	14.2	2	2½	2	NL	NP	NP	NP	NP
4. Ordinary plain concrete shear walls[l]	14.2	1½	2½	1½	NL	NP	NP	NP	NP
5. Intermediate precast shear walls [l]	14.2	4	2½	4	NL	NL	40[k]	40[k]	40[k]
6. Ordinary precast shear walls[l]	14.2	3	2½	3	NL	NP	NP	NP	NP
7. Special reinforced masonry shear walls	14.4	5	2½	3½	NL	NL	160	160	100
8. Intermediate reinforced masonry shear walls	14.4	3½	2½	2¼	NL	NL	NP	NP	NP
9. Ordinary reinforced masonry shear walls	14.4	2	2½	1¾	NL	160	NP	NP	NP
10. Detailed plain masonry shear walls	14.4	2	2½	1¾	NL	NP	NP	NP	NP
11. Ordinary plain masonry shear walls	14.4	1½	2½	1¼	NL	NP	NP	NP	NP
12. Prestressed masonry shear walls	14.4	1½	2½	1¾	NL	NP	NP	NP	NP
13. Ordinary reinforced AAC masonry shear walls	14.4	2	2½	2	NL	35	NP	NP	NP
14. Ordinary plain AAC masonry shear walls	14.4	1½	2½	1½	NL	NP	NP	NP	NP
15. Light-frame (wood) walls sheathed with wood structural panels rated for shear resistance or steel sheets	14.1 and 14.5	6½	3	4	NL	NL	65	65	65
16. Light-frame (cold-formed steel) walls sheathed with wood structural panels rated for shear resistance or steel sheets	14.1	6½	3	4	NL	NL	65	65	65
17. Light-frame walls with shear panels of all other materials	14.1 and 14.5	2	2½	2	NL	NL	35	NP	NP
18. Light-frame (cold-formed steel) wall systems using flat strap bracing	14.1	4	2	3½	NL	NL	65	65	65
B. BUILDING FRAME SYSTEMS									
1. Steel eccentrically braced frames	14.1	8	2	4	NL	NL	160	160	100
2. Steel special concentrically braced frames	14.1	6	2	5	NL	NL	160	160	100
3. Steel ordinary concentrically braced frames	14.1	3¼	2	3¼	NL	NL	35[j]	35[j]	NP[j]

Continued

IBC 2009 (ASCE 7-10) Design Response Spectra:

Table 12.2-1 (*Continued*)

Seismic Force-Resisting System	ASCE 7 Section Where Detailing Requirements Are Specified	Response Modification Coefficient, R[a]	Overstrength Factor, Ω_0[g]	Deflection Amplification Factor, C_d[b]	Structural System Limitations Including Structural Height, h_n (ft) Limits[c] Seismic Design Category				
					B	C	D[d]	E[d]	F[e]
4. Special reinforced concrete shear walls[l,m]	14.2	6	2½	5	NL	NL	160	160	100
5. Ordinary reinforced concrete shear walls[l]	14.2	5	2½	4½	NL	NL	NP	NP	NP
6. Detailed plain concrete shear walls[l]	14.2 and 14.2.2.8	2	2½	2	NL	NP	NP	NP	NP
7. Ordinary plain concrete shear walls[l]	14.2	1½	2½	1½	NL	NP	NP	NP	NP
8. Intermediate precast shear walls[l]	14.2	5	2½	4½	NL	NL	40[k]	40[k]	40[k]
9. Ordinary precast shear walls[l]	14.2	4	2½	4	NL	NP	NP	NP	NP
10. Steel and concrete composite eccentrically braced frames	14.3	8	2 ½	4	NL	NL	160	160	100
11. Steel and concrete composite special concentrically braced frames	14.3	5	2	4½	NL	NL	160	160	100
12. Steel and concrete composite ordinary braced frames	14.3	3	2	3	NL	NL	NP	NP	NP
13. Steel and concrete composite plate shear walls	14.3	6½	2½	5½	NL	NL	160	160	100
14. Steel and concrete composite special shear walls	14.3	6	2½	5	NL	NL	160	160	100
15. Steel and concrete composite ordinary shear walls	14.3	5	2½	4½	NL	NL	NP	NP	NP
16. Special reinforced masonry shear walls	14.4	5½	2½	4	NL	NL	160	160	100
17. Intermediate reinforced masonry shear walls	14.4	4	2½	4	NL	NL	NP	NP	NP
18. Ordinary reinforced masonry shear walls	14.4	2	2½	2	NL	160	NP	NP	NP
19. Detailed plain masonry shear walls	14.4	2	2½	2	NL	NP	NP	NP	NP
20. Ordinary plain masonry shear walls	14.4	1½	2½	1¼	NL	NP	NP	NP	NP
21. Prestressed masonry shear walls	14.4	1½	2½	1¾	NL	NP	NP	NP	NP
22. Light-frame (wood) walls sheathed with wood structural panels rated for shear resistance	14.5	7	2½	4½	NL	NL	65	65	65
23. Light-frame (cold-formed steel) walls sheathed with wood structural panels rated for shear resistance or steel sheets	14.1	7	2½	4½	NL	NL	65	65	65
24. Light-frame walls with shear panels of all other materials	14.1and 14.5	2½	2½	2½	NL	NL	35	NP	NP
25. Steel buckling-restrained braced frames	14.1	8	2½	5	NL	NL	160	160	100
26. Steel special plate shear walls	14.1	7	2	6	NL	NL	160	160	100

IBC 2009 (ASCE 7-10) Design Response Spectra:

Table 12.2-1 (*Continued*)

Seismic Force-Resisting System	ASCE 7 Section Where Detailing Requirements Are Specified	Response Modification Coefficient, R[a]	Overstrength Factor, Ω_0[g]	Deflection Amplification Factor, C_d[b]	Structural System Limitations Including Structural Height, h_n (ft) Limits[c] Seismic Design Category				
					B	C	D[d]	E[d]	F[e]
C. MOMENT-RESISTING FRAME SYSTEMS									
1. Steel special moment frames	14.1 and 12.2.5.5	8	3	5½	NL	NL	NL	NL	NL
2. Steel special truss moment frames	14.1	7	3	5½	NL	NL	160	100	NP
3. Steel intermediate moment frames	12.2.5.7 and 14.1	4½	3	4	NL	NL	35[h]	NP[h]	NP[h]
4. Steel ordinary moment frames	12.2.5.6 and 14.1	3½	3	3	NL	NL	NP[i]	NP[i]	NP[i]
5. Special reinforced concrete moment frames[n]	12.2.5.5 and 14.2	8	3	5½	NL	NL	NL	NL	NL
6. Intermediate reinforced concrete moment frames	14.2	5	3	4½	NL	NL	NP	NP	NP
7. Ordinary reinforced concrete moment frames	14.2	3	3	2½	NL	NP	NP	NP	NP
8. Steel and concrete composite special moment frames	12.2.5.5 and 14.3	8	3	5½	NL	NL	NL	NL	NL
9. Steel and concrete composite intermediate moment frames	14.3	5	3	4½	NL	NL	NP	NP	NP
10. Steel and concrete composite partially restrained moment frames	14.3	6	3	5½	160	160	100	NP	NP
11. Steel and concrete composite ordinary moment frames	14.3	3	3	2½	NL	NP	NP	NP	NP
12. Cold-formed steel—special bolted moment frame[p]	14.1	3½	3[o]	3½	35	35	35	35	35
D. DUAL SYSTEMS WITH SPECIAL MOMENT FRAMES CAPABLE OF RESISTING AT LEAST 25% OF PRESCRIBED SEISMIC FORCES	12.2.5.1								
1. Steel eccentrically braced frames	14.1	8	2½	4	NL	NL	NL	NL	NL
2. Steel special concentrically braced frames	14.1	7	2½	5½	NL	NL	NL	NL	NL
3. Special reinforced concrete shear walls[l]	14.2	7	2½	5½	NL	NL	NL	NL	NL
4. Ordinary reinforced concrete shear walls[l]	14.2	6	2½	5	NL	NL	NP	NP	NP
5. Steel and concrete composite eccentrically braced frames	14.3	8	2½	4	NL	NL	NL	NL	NL
6. Steel and concrete composite special concentrically braced frames	14.3	6	2½	5	NL	NL	NL	NL	NL

Continued

IBC 2009 (ASCE 7-10) Design Response Spectra:

Table 12.2-1 (*Continued*)

Seismic Force-Resisting System	ASCE 7 Section Where Detailing Requirements Are Specified	Response Modification Coefficient, R[a]	Overstrength Factor, Ω_0[g]	Deflection Amplification Factor, C_d[b]	Structural System Limitations Including Structural Height, h_n (ft) Limits[c] Seismic Design Category				
					B	C	D[d]	E[d]	F[e]
7. Steel and concrete composite plate shear walls	14.3	7½	2½	6	NL	NL	NL	NL	NL
8. Steel and concrete composite special shear walls	14.3	7	2½	6	NL	NL	NL	NL	NL
9. Steel and concrete composite ordinary shear walls	14.3	6	2½	5	NL	NL	NP	NP	NP
10. Special reinforced masonry shear walls	14.4	5½	3	5	NL	NL	NL	NL	NL
11. Intermediate reinforced masonry shear walls	14.4	4	3	3½	NL	NL	NP	NP	NP
12. Steel buckling-restrained braced frames	14.1	8	2½	5	NL	NL	NL	NL	NL
13. Steel special plate shear walls	14.1	8	2½	6½	NL	NL	NL	NL	NL
E. DUAL SYSTEMS WITH INTERMEDIATE MOMENT FRAMES CAPABLE OF RESISTING AT LEAST 25% OF PRESCRIBED SEISMIC FORCES	12.2.5.1								
1. Steel special concentrically braced frames[f]	14.1	6	2½	5	NL	NL	35	NP	NP
2. Special reinforced concrete shear walls[f]	14.2	6½	2½	5	NL	NL	160	100	100
3. Ordinary reinforced masonry shear walls	14.4	3	3	2½	NL	160	NP	NP	NP
4. Intermediate reinforced masonry shear walls	14.4	3½	3	3	NL	NL	NP	NP	NP
5. Steel and concrete composite special concentrically braced frames	14.3	5½	2½	4½	NL	NL	160	100	NP
6. Steel and concrete composite ordinary braced frames	14.3	3½	2½	3	NL	NL	NP	NP	NP
7. Steel and concrete composite ordinary shear walls	14.3	5	3	4½	NL	NL	NP	NP	NP
8. Ordinary reinforced concrete shear walls[f]	14.2	5½	2½	4½	NL	NL	NP	NP	NP
F. SHEAR WALL-FRAME INTERACTIVE SYSTEM WITH ORDINARY REINFORCED CONCRETE MOMENT FRAMES AND ORDINARY REINFORCED CONCRETE SHEAR WALLS[f]	12.2.5.8 and 14.2	4½	2½	4	NL	NP	NP	NP	NP

IBC 2009 (ASCE 7-10) Design Response Spectra:

Table 12.2-1 (*Continued*)

Seismic Force-Resisting System	ASCE 7 Section Where Detailing Requirements Are Specified	Response Modification Coefficient, R[a]	Overstrength Factor, Ω_0[g]	Deflection Amplification Factor, C_d[b]	Structural System Limitations Including Structural Height, h_n (ft) Limits[c] — Seismic Design Category B	C	D[d]	E[d]	F[e]
G. CANTILEVERED COLUMN SYSTEMS DETAILED TO CONFORM TO THE REQUIREMENTS FOR:	12.2.5.2								
1. Steel special cantilever column systems	14.1	2½	1¼	2½	35	35	35	35	35
2. Steel ordinary cantilever column systems	14.1	1¼	1¼	1¼	35	35	NP[i]	NP[i]	NP[i]
3. Special reinforced concrete moment frames[n]	12.2.5.5 and 14.2	2½	1¼	2½	35	35	35	35	35
4. Intermediate reinforced concrete moment frames	14.2	1½	1¼	1½	35	35	NP	NP	NP
5. Ordinary reinforced concrete moment frames	14.2	1	1¼	1	35	NP	NP	NP	NP
6. Timber frames	14.5	1½	1½	1½	35	35	35	NP	NP
H. STEEL SYSTEMS NOT SPECIFICALLY DETAILED FOR SEISMIC RESISTANCE, EXCLUDING CANTILEVER COLUMN SYSTEMS	14.1	3	3	3	NL	NL	NP	NP	NP

[a]Response modification coefficient, *R*, for use throughout the standard. Note *R* reduces forces to a strength level, not an allowable stress level.
[b]Deflection amplification factor, C_d, for use in Sections 12.8.6, 12.8.7, and 12.9.2.
[c]NL = Not Limited and NP = Not Permitted. For metric units use 30.5 m for 100 ft and use 48.8 m for 160 ft.
[d]See Section 12.2.5.4 for a description of seismic force-resisting systems limited to buildings with a structural height, h_n, of 240 ft (73.2 m) or less.
[e]See Section 12.2.5.4 for seismic force-resisting systems limited to buildings with a structural height, h_n, of 160 ft (48.8 m) or less.
[f]Ordinary moment frame is permitted to be used in lieu of intermediate moment frame for Seismic Design Categories B or C.
[g]Where the tabulated value of the overstrength factor, Ω_0, is greater than or equal to 2½, Ω_0 is permitted to be reduced by subtracting the value of 1/2 for structures with flexible diaphragms.
[h]See Section 12.2.5.7 for limitations in structures assigned to Seismic Design Categories D, E, or F.
[i]See Section 12.2.5.6 for limitations in structures assigned to Seismic Design Categories D, E, or F.
[j]Steel ordinary concentrically braced frames are permitted in single-story buildings up to a structural height, h_n, of 60 ft (18.3 m) where the dead load of the roof does not exceed 20 psf (0.96 kN/m^2) and in penthouse structures.
[k]An increase in structural height, h_n, to 45 ft (13.7 m) is permitted for single story storage warehouse facilities.
[l]In Section 2.2 of ACI 318. A shear wall is defined as a structural wall.
[m]In Section 2.2 of ACI 318. The definition of "special structural wall" includes precast and cast-in-place construction.
[n]In Section 2.2 of ACI 318. The definition of "special moment frame" includes precast and cast-in-place construction.
[o]Alternately, the seismic load effect with overstrength, E_{mh}, is permitted to be based on the expected strength determined in accordance with AISI S110.
[p]Cold-formed steel – special bolted moment frames shall be limited to one-story in height in accordance with AISI S110.

Solution- IBC 2009:

- ***Step 2: base shear***

From **Table 1.5-1 ASCE 7-10** the Risk Category is II and from **Table 1.5-2 ASCE 7-10**, the importance factor, I_e= 1

From Table 12.2-1 ASCE 7-10, factor R= 5

The base shear is given by:

$$C_s = \frac{S_{DS}}{R/I_e} = \frac{0.4}{5/1} = 0.08 \leq \frac{S_{D1}}{T(R/I_e)} = \frac{0.26}{0.613(5/1)} = 0.085$$

$$C_s \geq 0.044 S_{DS} I_e = 0.044 \times 0.4 \times 1 = 0.018$$

So,

$$V = 0.08 \times 29820 = 2386kN$$

- ***Step 3: vertical distribution of base shear***

$$F_X = \frac{w_x {h_x}^k}{\sum_{i=1}^{n} w_i {h_i}^k}$$

The factor k=1 for T=0.5 seconds and it is equal to 2 for T= 2.5 seconds. From interpolation, k=1.06. So,

$$F_X = \frac{w_x {h_x}^{1.06}}{\sum_{i=1}^{5} w_i {h_i}^{1.06}}$$

The seismic lateral forces at story levels are summarized in **Table 3**.

Solution- IBC 2009:

- ***Step 3: vertical distribution of base shear***

Table 3: Distribution of forces to stories

Story	w_x (kN)	$(h_x)^{1.06}$ (m)	$w_x (h_x)^{1.06}$ (kN.m)	F_x (kN)
5	5964	20.8	124051	814
4	5964	16.4	97810	641
3	5964	12.1	72164	473
2	5964	7.9	47116	309
1	5964	3.8	22663	149
0	5964	0	0	0
			363804kN.m	2386 kN

Summary:

Base shear, based on UBC 97 provisions = 3500kN

Base shear, based on IBC 2009 provisions = 3011KN

$$Ratio = \frac{2773}{2386} \times 100 = 116\% \quad 16\% \; increase$$

Sap2000- Notes- UBC 97 Response Spectra:

- **Case 1: section modifiers are used**

Section modifiers are used to take into account effective moment of inertia:

- Columns: 0.7
- Beams: 0.35
- Slabs: 0.25

Total mass= 2998 ton

Sap2000- notes- UBC 97 Response Spectra: (Case 1)

Support reactions:

- Dead= 17942 kN
- Superdead= 11880 kN
- Live= 7875 kN
- Dead+ superdead= 29822 kN (29820 kN by hand calculations))

First mode- movement in x- direction

Sap2000- notes- UBC 97 Response Spectra: (Case 1)

- **Periods:**

mode	Period (seconds)
1	1.500391
2	1.403013
3	1.152456
4	0.457011
5	0.432011
6	0.358311
7	0.238352
8	0.23001
9	0.19331
10	0.186297
11	0.181055
12	0.17404

Table 4: Structure period

The period in hand calculations is 0.625 seconds (UBC 97)

Sap2000- Notes- UBC 97 Response Spectra: (Case 1)

The mass and support reactions are equal to that in hand calculations

Response spectra factors: Ca= 0.24, Cv= 0.32, scale factor= 1:

- Seismic force in x- direction= 569.21kN
- Seismic force in y- direction= 602.114kN

Response spectra factors: Ca= 0.24, Cv= 0.32, scale factor, gI/R= 1.784:

- Seismic force in x- direction= 1015.47kN
- Seismic force in y- direction= 1074.172kN

The base shear in y- direction in hand calculations= 2773kN

Sap2000- Notes- UBC 97 Response Spectra: (Case 1)

- Mass participation ratios:

Table 5: Mass participation ratio

mode	period	Sum ux	Sum uy
1	1.500391	0.80924	4.377E-20
2	1.403013	0.80924	0.81467
3	1.152456	0.80924	0.81467
4	0.457011	0.92066	0.81467
5	0.432011	0.92066	0.9236
6	0.358311	0.92066	0.9236
7	0.238352	0.96807	0.9236
8	0.23001	0.96807	0.96885
9	0.19331	0.96807	0.96885
10	0.186297	0.96807	0.96885
11	0.181055	0.96807	0.96885
12	0.17404	0.96807	0.96885

Sap2000- Notes- UBC 97 Response Spectra: (Case 1)

- Distribution of seismic forces to stories and frames:

Table 6: Distribution of shear forces to frames
*values between brackets are from hand calculations
Notice that the distribution of forces to stories is not linear as defined in UBC 97.

Story	Shear force to exterior frame (kN)	Shear force to interior frame (kN)	Total shear force for all frames (story shear) (kN)
5	65.86	73.23	424.64
4	103.76	113.18	660.24
3	129.34	141.47	824.56
2	152.65	166.12	969.78
1	174.18	181.43	1074.08
Story	Lateral force to exterior frame (kN)	Lateral force to interior frame (kN)	Total lateral force for all frames (story shear) (kN)
5	65.86 (154)*	73.23 (154) *	424.64 (924)
4	37.9 (123)	39.95 (123)	235.6 (739)
3	25.58 (93)	28.29 (93)	164.32 (555)
2	23.31 (62)	24.65 (62)	145.22 (370)
1	21.53 (31)	15.31 (31)	104.3 (185)

Sap2000- Notes- UBC 97 Response Spectra: (Case 1)

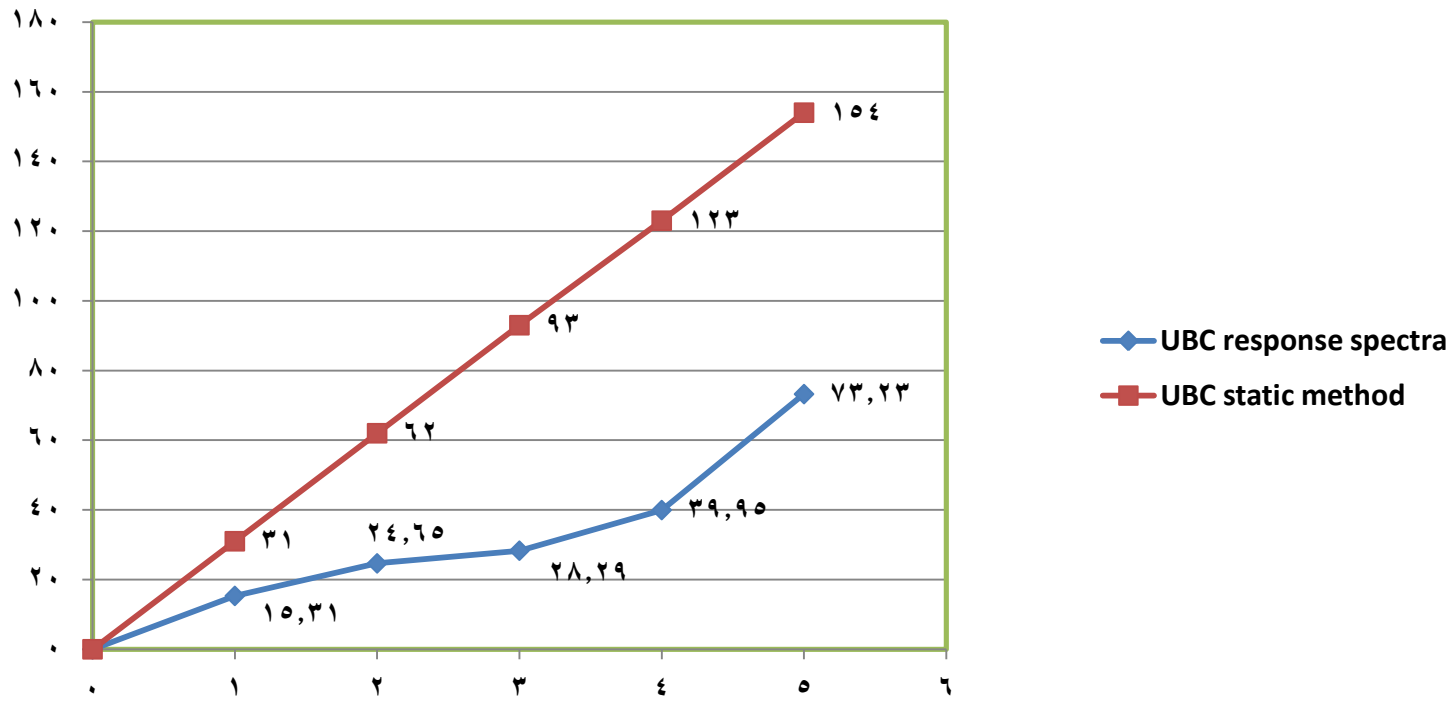

Figure 4: Distribution of forces to stories, UBC and equivalent static method, section modifiers are used

Sap2000- Notes- UBC 97 Response Spectra:

- **Case 2: section modifiers are not used**
- Periods:

mode	Period (seconds)
1	1.007548
2	0.945492
3	0.78894
4	0.319625
5	0.302472
6	0.253947
7	0.177836
8	0.171018
9	0.144941
10	0.121255
11	0.120044
12	0.118572

Table 7: Structure period
The period in hand calculations is 0.625 seconds (UBC 97)

Sap2000- Notes- UBC 97 Response Spectra: (Case 2)

Response spectra factors: Ca= 0.24, Cv= 0.32, scale factor= 1:

- Seismic force in x- direction= 823.6 kN
- Seismic force in y- direction= 884.5 kN

Response spectra factors: Ca= 0.24, Cv= 0.32, scale factor, gI/R= 1.784:

- Seismic force in x- direction= 1469.3 kN
- Seismic force in y- direction= 1578 kN

The base shear in y- direction in hand calculations= 2773 kN

Sap2000- Notes- UBC 97 Response Spectra: (Case 2)

- Mass participation ratios:

Table 8: Mass participation ratio

mode	period	Sum ux	Sum uy
1	1.007548	0.82833	0
2	0.945492	0.82833	0.8334
3	0.78894	0.82833	0.8334
4	0.319625	0.93317	0.8334
5	0.302472	0.93317	0.93651
6	0.253947	0.93317	0.93651
7	0.177836	0.97438	0.93651
8	0.171018	0.97438	0.97589
9	0.144941	0.97438	0.97589
10	0.121255	0.97438	0.97589
11	0.120044	0.99342	0.97589
12	0.118572	0.99381	0.97589

Sap2000- Notes- UBC 97 Response Spectra: (Case 2)

- Distribution of seismic forces to stories and frames:

Table 9: Distribution of forces to frames
*values between brackets are from hand calculations

Story	Shear force to exterior frame (kN)	Shear force to interior frame (kN)	Total shear force for all frames (story shear) (kN)
5	82.92	92.22	534.72
4	145.43	160.00	930.86
3	192.06	211.68	1230.85
2	227.04	249.78	1453.2
1	254.48	267.17	1577.64
Story	Lateral force to exterior frame (kN)	Lateral force to interior frame (kN)	Total lateral force for all frames (story shear) (kN)
5	82.92 (154)*	92.22 (154) *	534.72 (924)
4	62.51 (123)	67.78 (123)	396.14 (739)
3	46.63 (93)	51.68 (93)	299.99 (555)
2	34.98 (62)	38.1 (62)	222.35 (370)
1	27.44 (31)	17.39 (31)	124.44 (185)

Sap2000- Notes- UBC 97 Response Spectra: (Case 2)

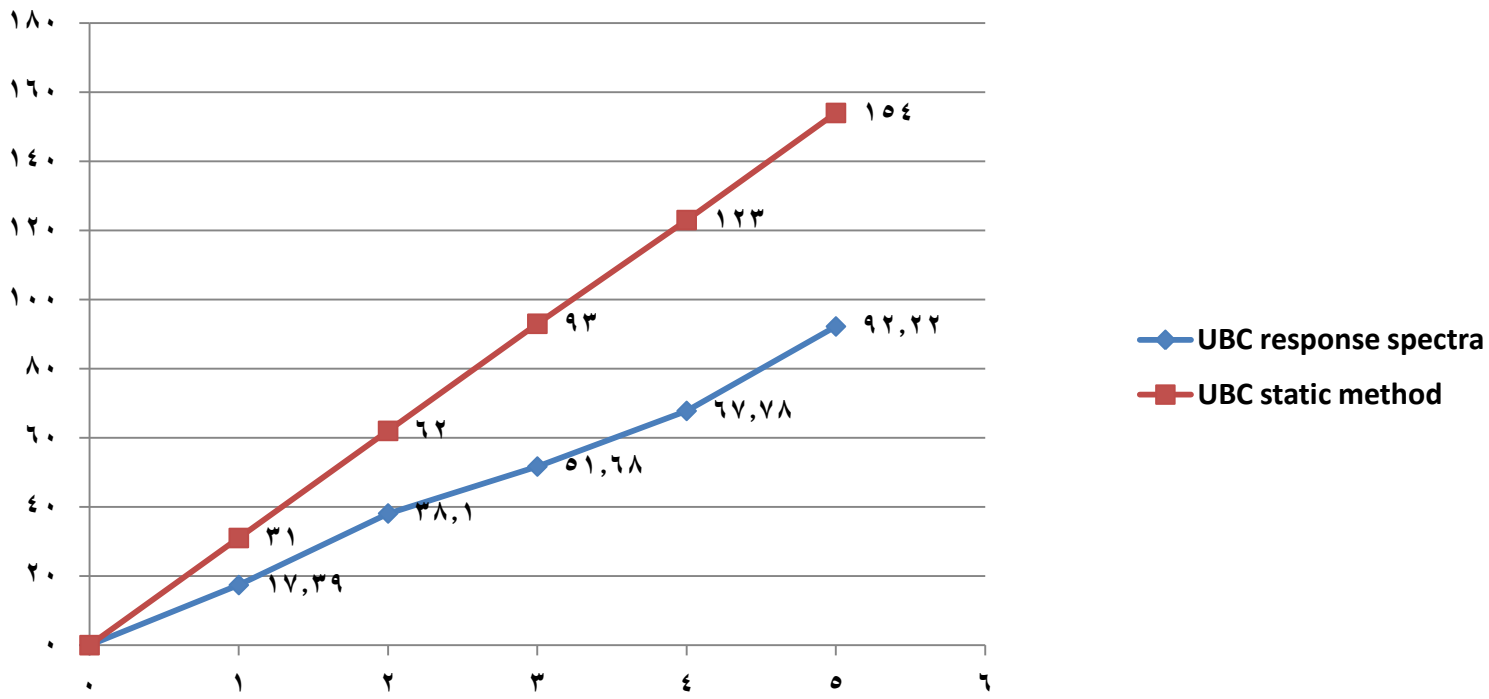

Figure 5: Distribution of forces to stories, UBC and equivalent static method, section modifiers are not used

Example 2: Shear Walls Concrete Building Bearing System

The figure below (**Figure 7**) shows the frames layout of an office building. Given:

- Number of stories = Five.
- Story height= 3.5 m.
- Materials: concrete cylinder compressive strength at 28 days, f'c= 28 MPa
- Steel yield strength, $f_y = 420\ MPa$
- Soil: soft rock, Sc type in accordance with UBC 97 provisions. Site class C in accordance with IBC 2009.
- All columns are square with side length equals to 500 mm.
- All beams are 300mm section width and 600mm total thickness.

Example 2: Shear Walls Concrete Building Bearing System

- The slab is one way solid slab of 200 mm thickness.
- Shear walls thickness is 250 mm.
- Shear walls weight =25 KN/m.
- The live load is 3 kN/m^2 – office building.
- The superimposed dead load is 4 kN/m^2.
- The perimeter wall weight is 3 kN/m Curtain Wall .
- Importance factor =1.
- Zone factor $Z = 0.2$ in UBC 97, $C_a = 0.24$, $C_v = 0.32$.

Example 2: Shear Walls Concrete Building Bearing System

- On lack of a map of spectral accelerations of S_1 and S_s, the following can be assumed:
  $S_1 = 1.25 \times Z$ $S_s = 2.5 \times Z$
  (amendment no. 3 to SI 413 (2009).
- Sizes of all columns in upper floors are kept the same.
- The floor diaphragms are assumed to be rigid.
- Location of building Nablus city .
- Earthquake load as…..UBC97 and IBC2009.

Determine the seismic lateral forces in each shear wall at floor levels using UBC 97 and IBC 2009 Code provisions.

Example 2: Shear Walls Concrete Building Bearing System

- Seismic Load:

  This load affects structure vertically and horizontally. The horizontal component is more dangerous than vertical component because it produces shear forces in the columns of the structure. Thus, it should be considered in analysis to achieve safety.

  Seismic load effect varies with the magnitude of the earthquake, structural system, soil type, site seismicity, and structure period. The seismic zone is 2B with Z=0.2 as shown in the Figure 6. (Palestine seismic zones map).

Example 2: Shear Walls Concrete Building Bearing System

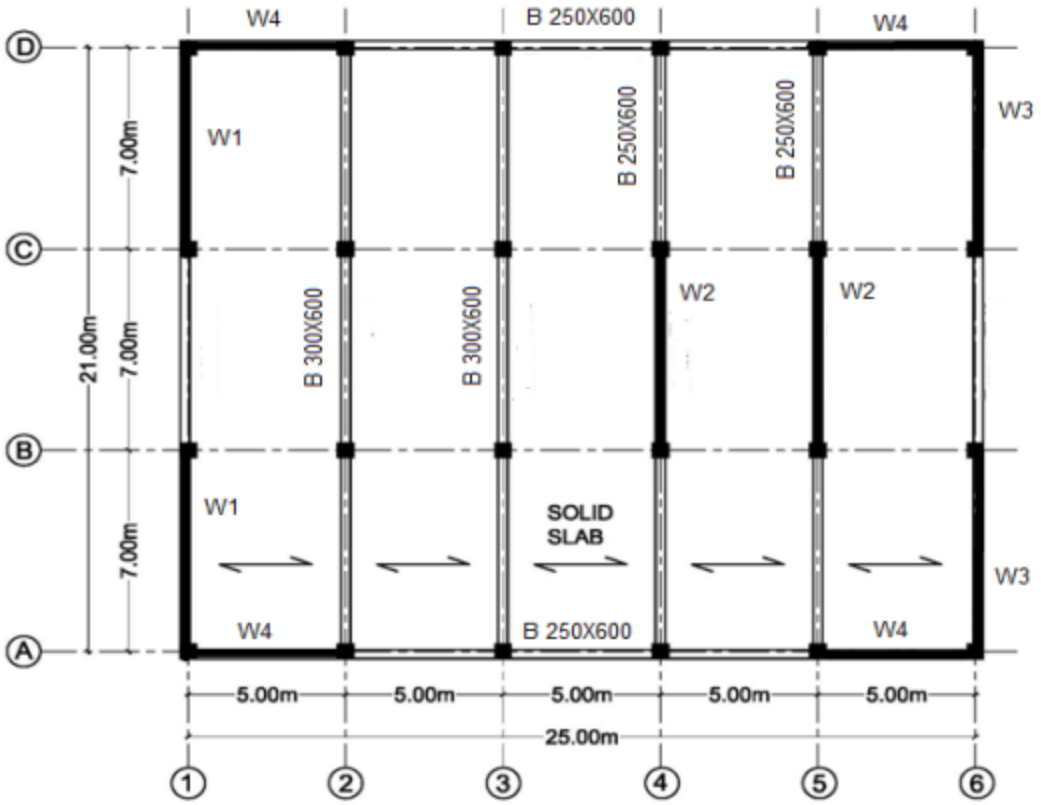

Figure 7: Building layout

Solution- UBC 97:

- ***Step 1: weight of the building***

Solid slab own weight= slab thickness x unit weight of concrete

$W_D = 0.20 \times 25 = 5kN/m^2$

$W_{slab} = 25 \times 21 \times 5 = 2625kN/m^2$

Beams weight= length of beams x cross section area x unit weight of concrete:

$$Main\ beams\ 300X600\ , Area = 0.18\ m^2\ \ , I = 0.0054\ m^4 and$$
$$250X600\ , Area = 0.15\ m^2, I = 0.0045\ m^4$$

$$W_{beams} = (21 \times 2)(0.3 \times 0.4 \times 25) + (15 \times 2 + 14 \times 2 + 7 \times 2)(0.25 \times 0.40 \times 25) = 306\ kN$$

Notice that the beam depth below slab is used which is 0.60-0.20= 0.40 m.

Solution- UBC 97:

- ***Step 1: weight of the building***

Columns weight= length of columns x cross section area x unit weight of concrete:

$$Columns\ 500X500\ at\ all\ floors\ , Area = 0.25\ m^2\ \ ,\ I = 0.005208\ m^4$$

$$W_{columns} = 2.9 \times 8 \times 0.50 \times 0.50 \times 25 = 145\ kN$$

(columns at edge of walls are neglected)

Solution- UBC 97:

- ***Step 1: weight of the building***

Shear wall weight= length of wall x weight of wall/m

$$W_{walls} = (7 \times 2 + 14 + 5 \times 4 + 7 \times 2)(25) = 1550\ kN$$

- $$W_1 = \frac{bh^3}{12} = \frac{0.25 \times 7^3}{12} = 7.15\ m^4$$
- $$W_2 = \frac{bh^3}{12} = \frac{0.25 \times 7^3}{12} = 7.15\ m^4$$
- $$W_3 = \frac{bh^3}{12} = \frac{0.25 \times 7^3}{12} = 7.15\ m^4$$
- $$W_4 = \frac{bh^3}{12} = \frac{0.25 \times 5^3}{12} = 2.6\ m^4$$

Curtain wall weight=$(5 \times 3 \times 2 + 7 \times 2)(3) = 132\ KN.$

Solution- UBC 97:

- ***Step 1: weight of the building***

Superimposed dead load on slab= area of slab x superimposed dead load/m^2

$$W_{superimposed} = 25 \times 21 \times 4 = 2100kN$$

Total weight of one story= $6858\ kN$

Total weight of building= $6858 \times 5 = 34290\ kN$

Example 2: Shear Walls Concrete Building Bearing System

- Seismic Load:

According to Uniform Building Code (UBC97), the seismic coefficients $C_a = 0.24$, $C_v = 0.32$, and according to IBC2009, are $F_a = 1.2$,$F_v = 1.55$.

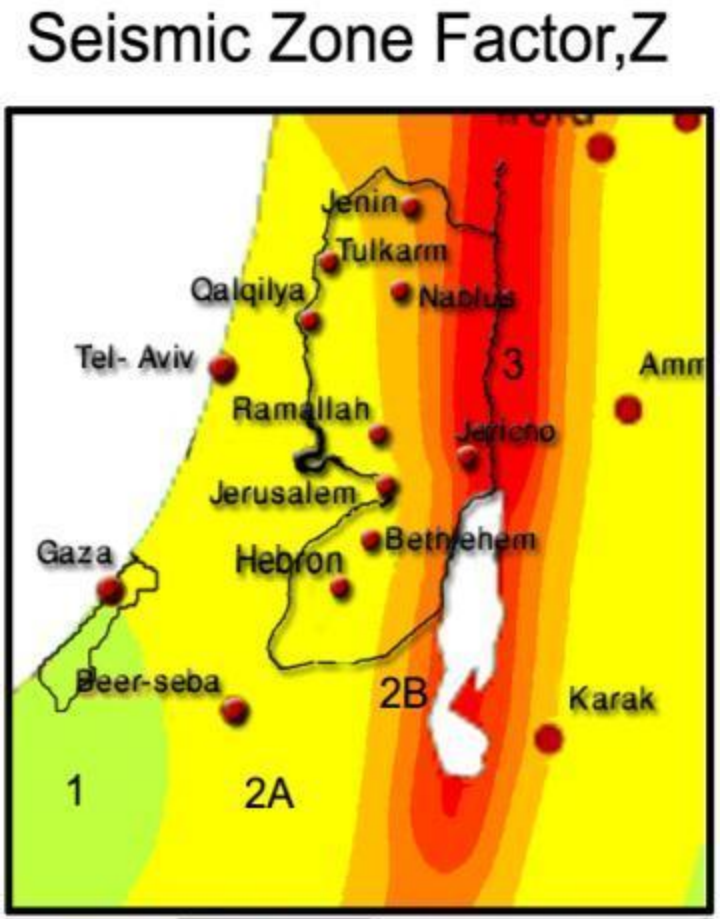

Zone	1	2A	2B	3
Z	0.075	0.15	0.20	0.3

Figure 6: Palestine Seismic Zones Map

Solution- UBC 97:

- ***Step 2: base shear***

The base shear, V will be

R= 4.5 from UBC97 **Table16-N** (Building Bearing system-1.2. a)

$$V = \frac{C_v I}{RT} W \qquad V = \frac{0.32 \times 1}{4.5 \times 0.4175} W = 0.17W$$

The base shear, V, need not exceed

$$V = \frac{2.5 C_a I}{R} W$$

$$V = \frac{2.5 \times 0.24 \times 1}{4.5} W = 0.133W < 0.17W$$

- ***Step 2: base shear***

Building period:

$$T = C_t (h_n)^{\frac{3}{4}}$$

$$h_n = 5\ floors \times 3.5 = 17.5m$$

$$C_t = 0.0488$$

$$T = 0.0488(17.5)^{\frac{3}{4}} = 0.4175\ seconds$$

Notice that the stiffness, k, which is the force divided by the lateral deformation, varies in each direction. But, in this example use this period, T, in both directions.

Solution- UBC 97:

- ***Step 2: base shear***

The base shear shall not be less than

$$V = 0.11 C_a I W$$

$$V = 0.11 \times 0.24 \times 1 \times W = 0.026W \ < 0.17W$$

So, total base shear will be

$$V = 0.133 \times 34290 = 4561\ kN$$

Since, T <0.7 seconds, F_t=0.0 kN

- ***Step 3: vertical distribution of base shear***

$$F_x = \frac{(V - F_t) w_x h_x}{\sum_{i=1}^{n} w_i h_i}$$

$$F_x = \frac{w_x x h}{w_x (1h + 2h + 3h + 4h + 5h)} = \frac{x}{15}$$

Where x is the number of the story. **Table 10** shows a summary of distribution of forces for the stories.

Solution- UBC 97:

- ***Step 4: calculation of eccentricity due to seismic forces.***

$$e_{max} = e_0 + e_2$$

$$e_{min} = e_0 - e_2$$

e_0 : the real eccentricity is the distance between the CR(center of stiffness and the CM and center of mass).

e_2 : accidental eccentricity $\quad e_2 = 0.05L$

L : the floor dimension perpendicular to the direction of the seismic action .

Solution- UBC 97:

- ***Step 4: calculation of eccentricity due to seismic forces.***
- $e_2 = 0.05 \times 25 = 1.25\ m$

$$e_{0x} = \frac{7.15 \times 12.5 \times 2 - 7.15 \times 2.5 - 7.15 \times 7.5 - 2 \times 7.15 \times 12.5}{7.15 \times 2 + 7.15 \times 4}$$

$$e_{0x} = \frac{-71.5}{\Sigma I} = \frac{-71.5}{43} = -1.663\ m$$

$$e_{max} = e_0 + e_2 \qquad e_{max} = 1.663 + 1.25 = 2.913 m$$

$$e_{min} = e_0 - e_2 \qquad e_{min} = 1.663 - 1.25 = 0.413 m$$

$$e_{0x} = \frac{-71.5}{\Sigma I} = \frac{-71.5}{43} = -1.663\ m$$

Which the eccentricity $e_{0x} = +1.663\ m$ to the right of the center of mass .

Solution- UBC 97:

- ***Step 5: horizontal distribution of story shear to walls.***

The distribution of the total seismic load, to walls are will be in proportion to their rigidities.. The flexural resistance of walls with respect to their weak axes may be neglected in lateral load analysis. **Table 11** summarizes the force distribution to the walls in y direction.

To calculate the force at each shear wall according to direct and torsional shear .

$$V_m = V * \frac{k_m}{K}\left[1 + \frac{K * d_m * e}{K_t}\right]$$

$$V_p = V * \frac{k_p * d_p * e}{K_t}$$

Solution- UBC 97:

- ***Step 5: horizontal distribution of story shear to walls.***

Where:

- V_m : The shear force of the structural walls m , parallel to the direction of the seismic action.
- V_p : The shear force of the structural walls p, perpendicular to the direction of the seismic action.
- d_m, d_p : The distance from the centers of gravity of the structural walls *m* and *p* to the considered center of rigidity.
- k_t : The torsion rigidity of the considered level.
- k_m ,k_p: The translation rigidity of the considered wall .
- K : The total translation rigidity of the considered level .

Solution- UBC 97:

Step 5: horizontal distribution of story shear to walls.

$$k_t = 7.15 \times (10.837^2) \times 2 + 7.15 \times (0.837^2) + 7.15 \times (5.837^2) + 7.15 \times (14.163^2) \times 2 + 4 \times 2.6 \times (10.5^2)$$

$$k_t = 5943 \text{ m}^6$$

$$V_{m1} = V * \frac{7.15}{43}\left[1 + \frac{43 * \langle 12.5 + 1.663\rangle * 2.913}{5943}\right] = 0.216\,V$$

$$V_{m2L} = V * \frac{7.15}{43}\left[1 - \frac{43 * \langle 2.5 - 1.663\rangle * 0.413}{5943}\right] = 0.166\,V$$

$$V_{m2R} = V * \frac{7.15}{43}\left[1 - \frac{43 * \langle 7.5 - 1.663\rangle * 0.413}{5943}\right] = 0.163\,V$$

$$V_{m3} = V * \frac{7.15}{43}\left[1 - \frac{43 * \langle 12.5 - 1.663\rangle * 0.413}{5943}\right] = 0.16\,V$$

$$V_{p4} = V * \frac{2.6 * 10.5 * 1.663}{5943} = 0.00764V$$

Solution- UBC 97:

- ***Step 5: horizontal distribution of story shear to walls.***

Story	$F_X(KN)$	$V(KN)$	$V_{m1}(KN)$	$V_{m2R}(KN)$	$V_{m2L}(KN)$	$V_{m3}(KN)$	$V_{p4}(KN)$	
$I_{m(\quad)}^{m}$			7.15	7.15	7.15	7.15	2.6	
			$0.216\,V$	$0.166\,V$	$0.163\,V$	$0.16\,V$	$0.00764V$	
5	1520	1520	328.3	252.3	247.8	243.2	11.6	
4	1216	2736	591	454.2	446	437.7	21	
3	912	3648	788	605.5	594.6	583.7	27.8	
2	608	4256	919.3	706.5	693.7	681	32.5	
1	304	4560	985	757	743.3	729.6	34.8	
0	0							
	4560 kN							

Table 11: Distribution of forces to shear wall at each story .

Solution- UBC 97:

- ***Step 5: horizontal distribution of story shear to walls.***

Story	$F_X(KN)$	$V(KN)$	$V_{m1}(KN)$	$V_{m2R}(KN)$	$V_{m2L}(KN)$	$V_{m3}(KN)$	$V_{p4}(KN)$	
$I_{m(\ )}^{m}$			7.15	7.15	7.15	7.15	2.6	
			$0.216\,V$	$0.166\,V$	$0.163\,V$	$0.16\,V$	$0.00764V$	
5	1520	1520	328.3	252.3	247.8	243.2	11.6	
4	1216	2736	591	454.2	446	437.7	21	
3	912	3648	788	605.5	594.6	583.7	27.8	
2	608	4256	919.3	706.5	693.7	681	32.5	
1	304	4560	985	757	743.3	729.6	34.8	
0	0							
	4560 kN							

Table 11: Distribution of forces to shear wall at each story .

Solution- IBC 2009:

- ***Step 1: weight of the building***

Total weight of one story= $6858\ kN$

Total weight of building=$6858 \text{ x } 5 = 34290\ kN$

- ***Step 2: base shear***

Building period

$$T_a = C_t(h_n)^x \qquad C_t = 0.0488\ ,$$

$$X = 0.75 \qquad Table\ 12.8-2 \quad ASCE\ 7-10$$

$$T_a = 0.0488(17.5)^{0.75} = 0.4175\ Seconds$$

The maximum considered earthquake spectral response accelerations are :

- $S_{MS} = F_a S_s$
- $S_{M1} = F_v S_1$

Solution- IBC 2009:

- ***Step 2: base shear***

Site class: C

- $S_s = 2.5 \times 0.2 = 0.5$
- $S_1 = 1.25 \times 0.2 = 0.25$

From **Table 1613.5.3 (1)**, $F_a = 1.2$

From **Table 1613.3 (2)**, $F_v = 1.55$

So,

$$S_{MS} = 1.2 \times 0.5 = 0.6$$
$$S_{M1} = 1.55 \times 0.25 = 0.388$$

- ***Step 2: base shear***

For 5% damping:

$$S_{DS} = \frac{2}{3} S_{MS} = \frac{2}{3} \times 0.6 = 0.4$$
$$S_{D1} = \frac{2}{3} S_{M1} = \frac{2}{3} \times 0.388 = 0.26$$

Seismic design category: occupancy category is II from **Table 1604.5** IBC 2009

From **Table 1613.5.6 (1)**, the seismic design category is C

From **Table 1613.5.6 (2)**, the seismic design category is D

So, the seismic design category is D

Solution- IBC 2009:

- ***Step 2: base shear***

From **Table 1.5-1 ASCE 7-10** the Risk Category is II and from **Table 1.5-2 ASCE 7-10**, the importance factor, I_e= 1

From **Table 12.2-1 ASCE 7-10**, factor R= 4.0

The base shear is given by:

Response Coefficient R = 4.0 Bearing Wall System Shear Wall , **Table 12.2-1**(a.2).

$$C_s = \frac{S_{DS}}{R/I_e} = \frac{0.4}{4.0/1} = 0.1 \quad \leq \frac{S_{D1}}{T(R/I_e)} = \frac{0.26}{0.4175(4.0/1)} = 0.1557$$

$$C_s \geq 0.044 S_{DS} I_e = 0.044 \times 0.4 \times 1 = 0.018$$

So,

$$V = 0.1 \times 34290 = 3429\ kN$$

Solution- IBC 2009:

- ***Step 3: vertical distribution of base shear***

$$F_X = \frac{w_x {h_x}^k}{\sum_{i=1}^{n} w_i {h_i}^k}$$

The factor k=1 for T=0.5 seconds and it is equal to 2 for T= 2.5 seconds. From interpolation, k=1.0. So,

$$F_X = \frac{w_x {h_x}^{1.0}}{\sum_{i=1}^{5} w_i {h_i}^{1.0}}$$

The seismic lateral forces at story levels are summarized in **Table 12**.

Solution- IBC 2009:

- ***Step 3: vertical distribution of base shear***

Story	$w_x(KN)$	$h_x{}^{1.0}(m$	$w_x h_x{}^{1.0}(KN.m)$	$F_X(KN)$
5	6858	17.5	120015	(5/15) V= 1143
4	6858	14	96012	(4/15) V= 915
3	6858	10.5	72009	(3/15) V= 686
2	6858	7	48006	(2/15) V= 457
1	6858	3.5	24003	(1/15) V= 228
0	6858	0	0	0
			360045 $KN.m$	3429 KN

Table 12: Distribution of forces to stories

Solution- IBC 2009:

- ***Step 4: horizontal distribution of story shear to walls.***

The distribution of the total seismic load, to walls are will be in proportion to their rigidities.. The flexural resistance of walls with respect to their weak axes may be neglected in lateral load analysis. **Table 13** summarizes the force distribution to the walls in y direction.

Solution- IBC 2009:

- ***Step 4: horizontal distribution of story shear to walls.***

Story	$F_X(KN)$	$V(KN)$	$V_{m1}(KN)$	$V_{m2R}(KN)$	$V_{m2L}(KN)$	$V_{m3}(KN)$	$V_{p4}(KN)$
$I_{m(\ )}$			7.15	7.15	7.15	7.15	2.6
			$0.216\ V$	$0.166\ V$	$0.163\ V$	$0.16\ V$	$0.00764V$
5	1143	1143	247	190	186	183	9
4	915	2058	445	342	335	329	16
3	686	2744	593	455	447	439	21
2	457	3201	691	531	522	512	25
1	228	3429	740	569	559	549	26
0	0						
	$3429\ KN$						

Table 13: Distribution of forces to shear wall at each story (IBC).

Summary:

Base shear, based on UBC 97 provisions = 4560 KN

Base shear, based on IBC 2009 provisions = 3429 KN

$$Ratio = \frac{4560}{3429} \times 100 = 133\% \qquad 33\ \%\ increase$$

Example 3: Shear Walls Concrete Building Frame System

The figure below (**Figure 8**) shows the frames layout of an office building. Given:

- Number of stories = Five.
- Story height= 3.5 m.
- Materials: concrete cylinder compressive strength at 28 days, f'c= 28 MPa
- Steel yield strength, $f_y = 420\ MPa$
- Soil: soft rock, Sc type in accordance with UBC 97 provisions. Site class C in accordance with IBC 2009.
- All columns are square with side length equals to 500 mm.
- All beams are 300mm section width and 600mm total thickness.

Example 3: Shear Walls Concrete Building Frame Syste

- The slab is one way solid slab of 200 mm thickness.
- Shear walls thickness is 250 mm.
- Shear walls weight =25 KN/m.
- The live load is 3 kN/m^2 – office building.
- The superimposed dead load is 4 kN/m^2
- The perimeter wall weight is 3 kN/m Curtain Wall .
- Importance factor =1.
- Zone factor $Z = 0.2$ in UBC 97, $C_a = 0.24$, $C_v = 0.32$.

Example 3: Shear walls concrete building frame syste

- On lack of a map of spectral accelerations of S_1 and S_S, the following can be assumed:
  $S_1 = 1.25 \times Z$ $S_s = 2.5 \times Z$
  (amendment no. 3 to SI 413 (2009).
- Sizes of all columns in upper floors are kept the same.
- The floor diaphragms are assumed to be rigid.
- Location of building Nablus city .
- Earthquake load as…..UBC97 and IBC2009.

Determine the seismic lateral forces in each shear wall at floor levels using UBC 97 and IBC 2009 Code provisions.

Seismic Load:

According to Uniform Building Code (UBC97), the seismic coefficients $C_a = 0.24$, $C_v = 0.32$.

Example 3: Shear Walls Concrete Building Frame Syste

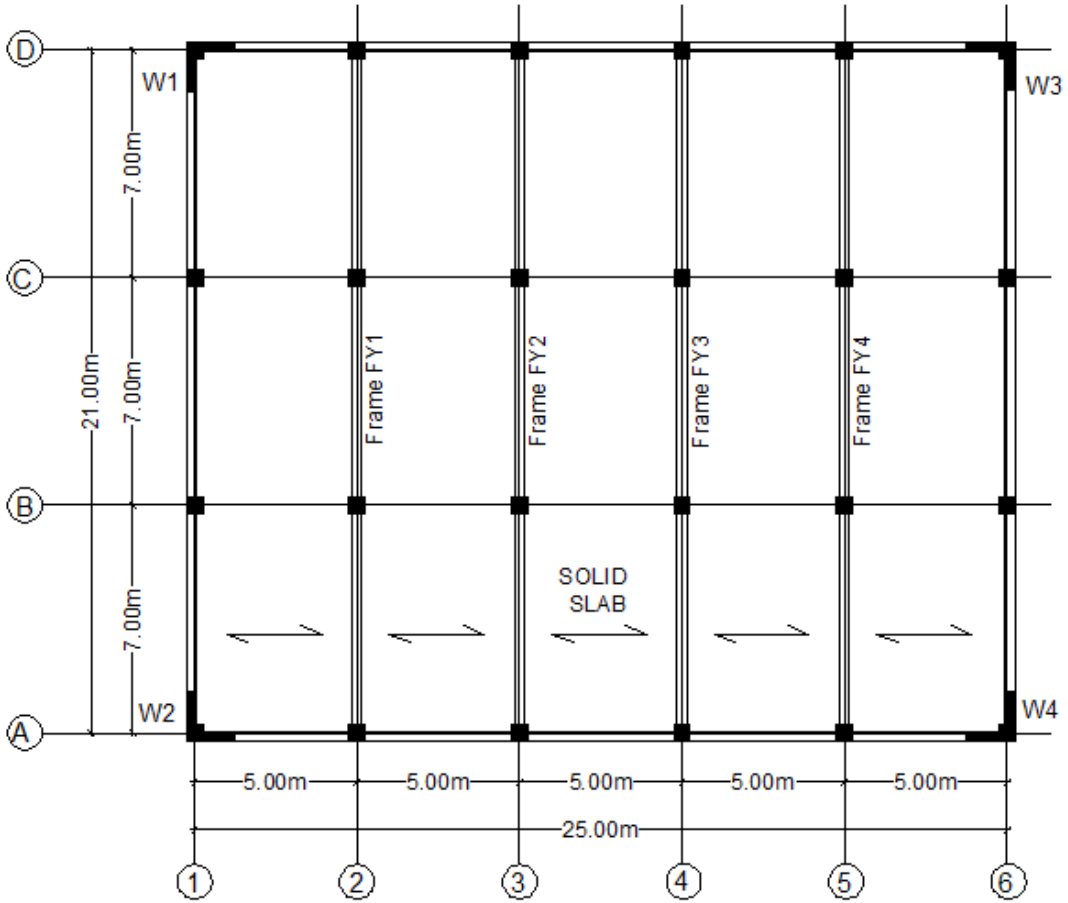

Figure 8: Frames layout

Solution- UBC 97:

- ***Step 1: weight of the building***

Solid slab own weight= slab thickness x unit weight of concrete

$$W_D = 0.20 \times 25 = 5kN/m^2$$

$$W_{slab} = 25 \times 21 \times 5 = 2625kN/m^2$$

- ***Step 1: weight of the building***

Beams weight= length of beams x cross section area x unit weight of concrete:

$$Main\ beams\ 300X600\ , Area = 0.18\ m^2\ \ , I = 0.0054\ m^4\ and$$
$$250X600\ , Area = 0.15\ m^2, I = 0.0045\ m^4$$

$$W_{beams} = (21 \times 4)(0.3 \times 0.4 \times 25) + (22 \times 2 + 18 \times 2)(0.25 \times 0.40 \times 25) = 452\ kN$$

Notice that the beam depth below slab is used which is 0.60-0.20= 0.40 m.

Columns weight= length of columns x cross section area x unit weight of concrete:

Solution- UBC 97:

- ***Step 1: weight of the building***

Columns 500X500 at all floors , Area $= 0.25\ m^2$, $I = 0.005208\ m^4$

$$W_{columns} = 2.9 \times 20 \times 0.50 \times 0.50 \times 25 = 362.5\ kN$$

Shear wall weight= length of wall x weight of wall/m

$$W_{walls} = (1.5 \times 4 + 1.5 \times 4)(25) = 300\ kN$$

- $W_1 = \frac{bh^3}{12} = \frac{0.25 \times 1.5^3}{12} = 0.07\ m^4$
- $W_2 = \frac{bh^3}{12} = \frac{0.25 \times 1.5^3}{12} = 0.07 m^4$
- $W_3 = \frac{bh^3}{12} = \frac{0.25 \times 1.5^3}{12} = 0.07\ m^4$
- $W_4 = \frac{bh^3}{12} = \frac{0.25 \times 1.5^3}{12} = 0.07\ m^4$

Curtain wall weight=$(22 \times 2 + 18 \times 2)(3) = 240\ KN.$

Solution- UBC 97:

- ***Step 1: weight of the building***

Superimposed dead load on slab= area of slab x superimposed dead load/m^2

$$W_{superimposed} = 25 \times 21 \times 4 = 2100kN$$

- Total weight of one story= $6079.5\ kN$
- Total weight of building= 6079.5 x 5 $= 30397.5\ kN$

- ***Step 2: base shear***

Building period:

$$T = C_t(h_n)^{\frac{3}{4}}$$

$$h_n = 5\ floors\ \times\ 3.5 = 17.5m$$

$$C_t = 0.0488$$

$$T = 0.0488(17.5)^{\frac{3}{4}} = 0.4175\ seconds$$

Notice that the stiffness, k, which is the force divided by the lateral deformation, varies in each direction. But, in this example use this period, T, in both directions.

Solution- UBC 97:

- ***Step 2: base shear***

The base shear, V will be

R= 4.2 from **Table16-N** (Dual system- 4.1. b)

$$V = \frac{C_v I}{RT} W \qquad V = \frac{0.32 \times 1}{4.2 \times 0.4175} W = 0.18W$$

The base shear, V, need not exceed

$$V = \frac{2.5 C_a I}{R} W$$

$$V = \frac{2.5 \times 0.24 \times 1}{4.2} W = 0.143W < 0.18W$$

- ***Step 2: base shear***

The base shear shall not be less than

$$V = 0.11 C_a I W \quad V = 0.11 \times 0.24 \times 1 \times W = 0.026W < 0.18W$$

So, total base shear will be:

$$V = 0.143 \times 30397.5 = 4346.8\ kN$$

Since, T <0.7 seconds, F_t=0.0 kN

Solution- UBC 97:

- ***Step 3: vertical distribution of base shear***

$$F_x = \frac{(V - F_t)w_x h_x}{\sum_{i=1}^{n} w_i h_i}$$

$$F_x = \frac{w_x x h}{w_x(1h + 2h + 3h + 4h + 5h)} = \frac{x}{15}$$

Where x is the number of the story. **Table 14** shows a summary of distribution of forces for the stories.

Solution- UBC 97:

- ***Step 3: vertical distribution of base shear***

$Story$	$w_x(KN)$	$h_x \quad (m)$	$w_x h_x \quad (KN.m)$	$F_X(KN)$
5	6079.5	17.5	106391	(5/15) V= 1449
4	6079.5	14	85113	(4/15) V= 1159
3	6079.5	10.5	63834.75	(3/15) V= 869
2	6079.5	7	42556.5	(2/15) V= 580
1	6079.5	3.5	21278.25	(1/15) V= 290
0	0	0	0	0
			$319173.5KN.m$	$4347KN$

Table 14: Distribution of forces to stories

Solution- UBC 97:

- ***Step 4: calculation of eccentricity due to seismic forces.***

$$e_{max} = e_0 + e_2$$

$$e_{min} = e_0 - e_2$$

e_0 : the real eccentricity is the distance between the CR(center of stiffness and the CM and center of mass).

e_2 : accidental eccentricity $\quad e_2 = 0.05L$

L : the floor dimension perpendicular to the direction of the seismic action .

Solution- UBC 97:

- ***Step 4: calculation of eccentricity due to seismic forces.***

$$e_2 = 0.05 \times 25 = 1.25\ m$$

$$e_{0\,x} = 0.0$$

Solution- UBC 97:

- ***Step 4: calculation of eccentricity due to seismic forces.***

Assume that the frames that resist the direct base shear are frames (Fy) FY1 to FY4 only; in y- direction.

Let the stiffness of each frame is K, so

$$\sum K_{yi} = 4K \quad for\ columns$$

$$K_C = \frac{bh^3}{12} = \frac{0.5 \times 0.5^3}{12} = 0.005208\ m^4 \ldots\ldots\ldots The\ stiffness\ of\ each\ column$$

$$K_y = 4(0.005208) = 0.0208\ m^4 \ldots\ldots\ldots The\ stiffness\ of\ each\ frame$$

Solution- UBC 97:

- ***Step 4: calculation of eccentricity due to seismic forces.***

So, for frame FY1 or FY4

$$\sum K_{Fi} = 4K = 0.0208\text{X}4 = 0.083 \dots \dots \dots . \; for\ all\ Frames$$

$$\sum K = 0.083 + 4X0.07 = 0.363 \dots \dots$$

$$V_{F1,4} = \frac{K}{\sum K} V + \frac{K(12.5)}{(\sum K)K_t} V(0.0) = \frac{0.0208}{0.363} V = 0.057V$$

$$(neglect\ accidental\ eccentricity\ e_o)$$

Solution- UBC 97:

- ***Step 4: calculation of eccentricity due to seismic forces.***

$$V_m = V * \frac{k_m}{K}\left[1 + \frac{K * d_m * e}{K_t}\right]$$

$$V_p = V * \frac{k_p * d_p * e}{K_t}$$

$$V_m = V * \frac{k_m}{K} \qquad (neglect\ accidental\ eccentricity\ e_o)$$

$$V_{m1} = V_{m2} = V_{m3} = V_{m4} = V * \frac{0.07}{0.363} = 0.193V$$

Solution- UBC 97:

- ***Step 5: horizontal distribution of story shear to walls and frames .***

The distribution of the total seismic load, to walls are will be in proportion to their rigidities.. The flexural resistance of walls with respect to their weak axes may be neglected in lateral load analysis. **Table 15** summarizes the force distribution to the walls in y direction.

Solution- UBC 97:

- ***Step 5: horizontal distribution of story shear to walls and frames .***

Story	$F_X(KN)$	$V(KN)$	$V_{m1}(KN)$	$V_{m2}(KN)$	$V_{m3}(KN)$	$V_{m4}(KN)$	$V_{F1,4}$
$I_{m(\ )}$			0.07	0.07	0.07	0.07	0.0208
			$0.193V$	$0.193V$	$0.193V$	$0.193V$	$0.057V$
5	1449	1449	279.6	279.6	279.6	279.6	82.6
4	1159	2608	503.3	503.3	503.3	503.3	148.6
3	869	3477	671	671	671	671	198.2
2	580	4057	783	783	783	783	231.2
1	290	4347	839	839	839	839	247.8
0	0						
	$4347KN$						

Table 15: Distribution of forces to shear wall at each story

Solution- IBC 2009:

- ***Step 1: weight of the building***

Total weight of one story= $6079.5\ kN$

Total weight of building=

$$6079.5 \text{ x } 5 = 30397.5\ kN$$

- ***Step 2: base shear***

Building period

$$T_a = C_t(h_n)^x \qquad C_t = 0.0488\ ,$$

$$X = 0.75 \qquad Table\ 12.8-2 \quad ASCE\ 7-10$$

$$T_a = 0.0488(17.5)^{0.75} = 0.4175\ Seconds$$

The maximum considered earthquake spectral response accelerations are :

- $S_{MS} = F_a S_s$
- $S_{M1} = F_v S_1$

Solution- IBC 2009:

- ***Step 2: base shear***

Site class: C

- $S_s = 2.5 \times 0.2 = 0.5$
- $S_1 = 1.25 \times 0.2 = 0.25$

From **Table 1613.5.3 (1),** $F_a = 1.2$

From **Table 1613.3 (2),** $F_v = 1.55$

So,

- $S_{MS} = 1.2 \times 0.5 = 0.6$
- $S_{M1} = 1.55 \times 0.25 = 0.388$

Solution- IBC 2009:

- ***Step 2: base shear***

For 5% damping:

- $S_{DS} = \frac{2}{3} S_{MS} = \frac{2}{3} \times 0.6 = 0.4$
- $S_{D1} = \frac{2}{3} S_{M1} = \frac{2}{3} \times 0.388 = 0.26$

Seismic design category: occupancy category is II from **Table 1604.5** IBC 2009

From **Table 1613.5.6 (1),** the seismic design category is C

From **Table 1613.5.6 (2),** the seismic design category is D

So, the seismic design category is D

Solution- IBC 2009:

- ***Step 2: base shear***

From **Table 1.5-1** ASCE 7-10 the Risk Category is II and from **Table 1.5-2** ASCE 7-10, the importance factor, I_e= 1

From **Table 12.2-1** ASCE 7-10, factor R= 4.0

The base shear is given by:

Response Coefficient R = 4.5 Shear Wall with ordinary Reinforced Concrete Frame , **Table 12.2-1 (F).**

Solution- IBC 2009:

- ***Step 2: base shear***

$$C_s = \frac{S_{DS}}{R/I_e} = \frac{0.4}{4.5/1} = 0.089 \quad \leq$$

$$\frac{S_{D1}}{T(R/I_e)} = \frac{0.26}{0.4175(4.5/1)} = 0.138$$

$$C_s \geq 0.044 S_{DS} I_e = 0.044 \times 0.4 \times 1 = 0.018$$

So,

$$V = 0.089 \times 30397.5 \ = 2705.4 \ kN$$

- ***Step 3: vertical distribution of base shear***

$$F_X = \frac{w_x {h_x}^k}{\sum_{i=1}^{n} w_i {h_i}^k}$$

The factor k=1 for T=0.5 seconds and it is equal to 2 for T= 2.5 seconds. From interpolation, k=1.0. So,

$$F_X = \frac{w_x {h_x}^{1.0}}{\sum_{i=1}^{5} w_i {h_i}^{1.0}}$$

The seismic lateral forces at story levels are summarized in **Table 16**

Solution- IBC 2009:

- ***Step 3: vertical distribution of base shear***

Story	$w_x(KN)$	$h_x{}^{1.0}(m)$	$w_x h_x{}^{1.0}(KN.n$	$F_X(KN)$
5	6079.5	17.5	106391	(5/15) V= 902
4	6079.5	14	85113	(4/15) V= 722
3	6079.5	10.5	63834.75	(3/15) V= 541
2	6079.5	7	42556.5	(2/15) V= 361
1	6079.5	3.5	21278.25	(1/15) V= 180
0	0	0	0	0
			$319173.5KN.$	$2706\ kN$

Table 16: Distribution of forces to stories.

Solution- IBC 2009:

- ***Step 4: horizontal distribution of story shear to walls and frames***

The distribution of the total seismic load, to walls are will be in proportion to their rigidities.. The flexural resistance of walls with respect to their weak axes may be neglected in lateral load analysis. **Table 17** summarizes the force distribution to the walls in y direction.

Solution- IBC 2009:

- ***Step 4: horizontal distribution of story shear to walls and frames***

Story	$F_X(KN)$	$V(KN)$	$V_{m1}(KN)$	$V_{m2}(KN)$	$V_{m3}(KN)$	$V_{m4}(KN)$	$V_{F1,4}$
$I_{m(\ )}$			0.07	0.07	0.07	0.07	0.0208
			$0.193V$	$0.193V$	$0.193V$	$0.193V$	$0.057V$
5	902	902	174	174	174	174	51.4
4	722	1624	313.4	313.4	313.4	313.4	92.5
3	541	2165	418	418	418	418	123.4
2	361	2526	487.5	487.5	487.5	487.5	144
1	180	2706	522	522	522	522	154.2
0	0						
	$2706\ kN$						

Table 17: Distribution of forces to shear wall at each story (IBC).

Summary:

Base shear, based on UBC 97 provisions = 4347 KN

Base shear, based on IBC 2009 provisions = 2706 KN

$$Ratio = \frac{4347}{2706} \times 100 = 160\% \qquad 60\ \%\ increase$$

Summary:

Story	$V(KN)$	$V(KN)$	$V_{m1}(KN)$		$V_{m2}(KN)$		$V_{m3}(KN)$		$V_{m4}(KN)$		$V_{F1,4}$	
$I_{m(\ )}$	UBC 97	IBC 2009	0.07		0.07		0.07		0.07		0.0208	
			$0.193V$		$0.193V$		$0.193V$		$0.193V$		$0.057V$	
			UBC	IBC	UBC	IBC	UBC	IBC	UBC	IBC	UBC	IBC
5	1449	902	279.6	174	279.6	174	279.6	174	279.6	174	82.6	51.4
4	2608	1624	503.3	313	503.3	313	503.3	313	503.3	313	148.6	92.5
3	3477	2165	671	418	671	418	671	418	671	418	198.2	123.
2	4057	2526	783	487	783	487	783	487	783	487	231.2	144
1	4347	2706	839	522	839	522	839	522	839	522	247.8	154.

Table 18: Distribution of forces to shear walls at each story UBC 97 and IBC 2009.

Structural Details (Ordinary Frames)

- **Beams**
- At least two top and bottom bars extended l_d in the columns as shown in the figure, where: l_d = development length of steel bars in tension.

$$l_d = \frac{f_y d_b}{5.4\sqrt{f'_c}} \geq max\begin{Bmatrix} 150\ \text{mm} \\ 8d_b \end{Bmatrix}$$

for hooked bars

$$l_d = \frac{f_y d_b}{2.16\sqrt{f'_c}} \geq max\begin{Bmatrix} 375\ \text{mm} \\ 20d_b \end{Bmatrix}$$

for straight bottom bars

$$l_d = \frac{f_y d_b}{1.66\sqrt{f'_c}} \geq max\begin{Bmatrix} 490\ \text{mm} \\ 26d_b \end{Bmatrix}$$

for straight top bars

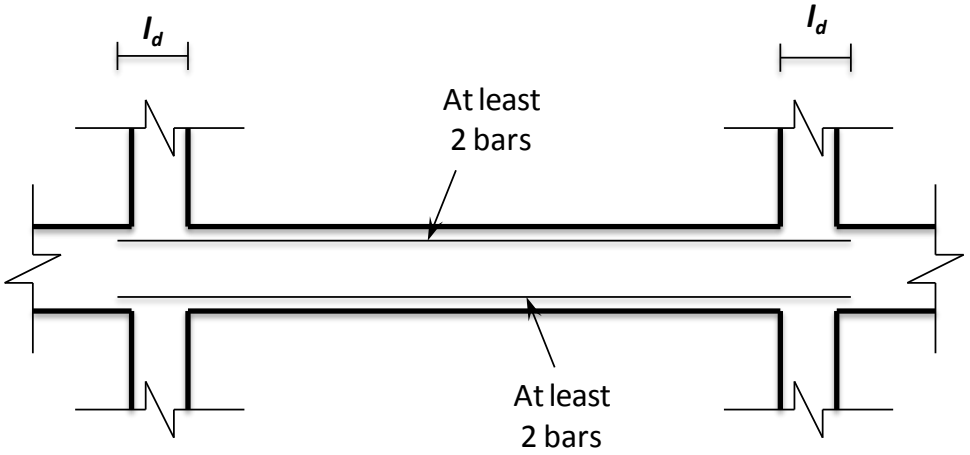

Structural Details (Ordinary Frames)

- **Columns**

Columns with $h/c_1 < 5$ shall be designed as in intermediate frames, where: h = clear column height, and c_1 = maximum column cross sectional dimension.

Structural Details (Intermediate Frames)

- **Beams ($P_u \leq 0.1\, A_g\, f'_c$)**

The beam shall be designed to resist V_u taken as the larger of:

The value computed as in the figure below

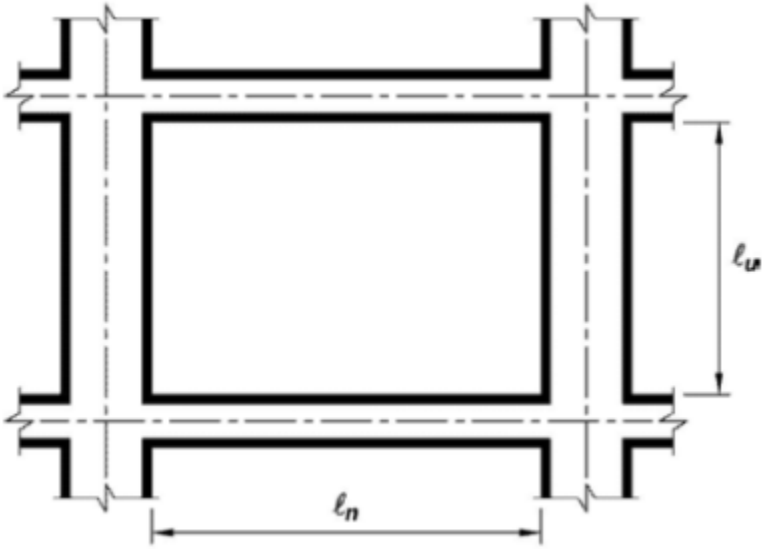

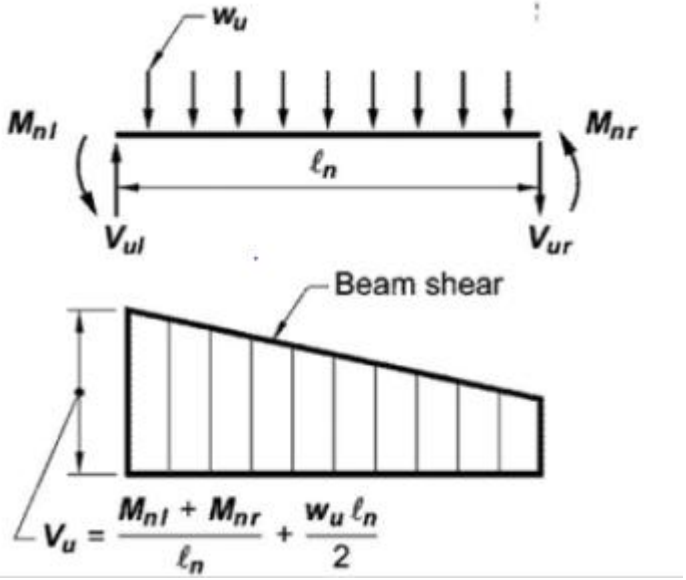

where: M_{nl} and M_{nr} = moment capacities at left and right ends of beam, respectively, computed at face of beam-column joints in the direction shown in the figure above. The value computed by taking **twice** the earthquake load in the load combinations

Structural Details (Intermediate Frames)

- **Beams ($P_u \leq 0.1\, A_g\, f'_c$)**
- Bottom steel at face of joint ≥ 1/3 top steel at face of joint
- Bottom or top steel at any section ≥ 1/5 top steel at face of joint
- Stirrups shall be computed based on shear force V_u and shall have a maximum spacing as shown in the figure

where:

$$s_1 = Min \begin{Bmatrix} d/4 \\ 8d_b \\ 24d_s \\ 300\ \text{mm} \end{Bmatrix}$$

$s_2 = d/2$

d = effective depth of beam.

d_s = diameter of steel bar used for stirrup.

d_b = diameter of steel bar.

l_d = development length of steel bars in tension.

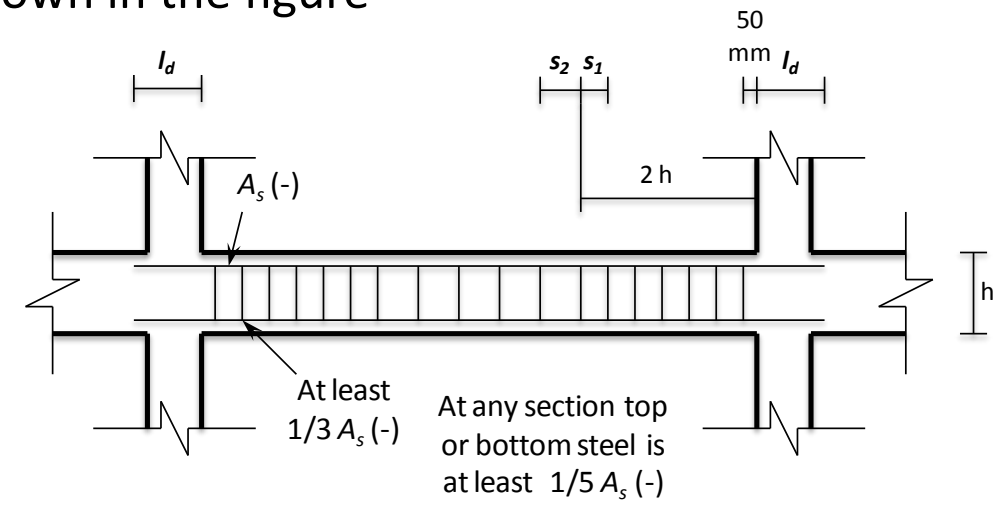

Structural Details (Intermediate Frames)

- **Columns ($P_u > 0.1\, A_g\, f'_c$)**

The column shall be designed to resist V_u taken as the larger of:

The value computed as in the figure below

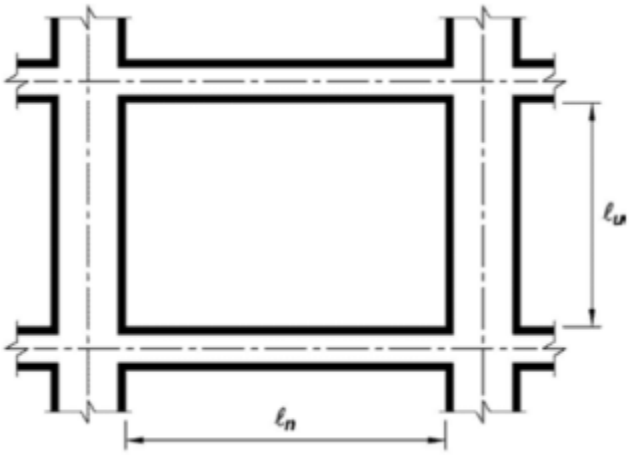

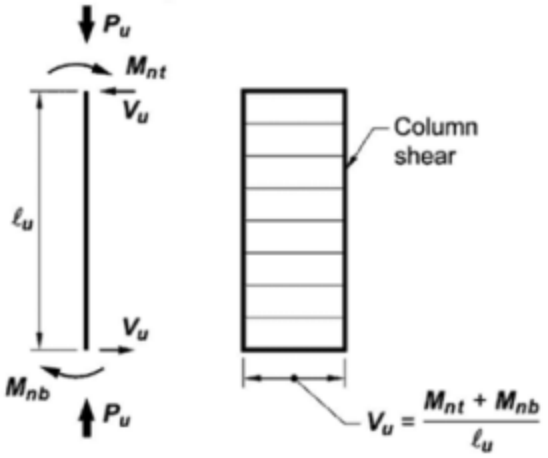

where: M_{nl} and M_{nr} = maximum moment capacities at top and bottom ends of column, respectively, computed at face of beam-column joints in the direction shown in the figure above. The value computed by taking **3 times** the earthquake load in the load combinations.

Structural Details (Intermediate Frames)

- **Columns ($P_u > 0.1\, A_g\, f'_c$)**
- Lap splice of bars shall be used at mid-height of the column with lap splice length, $l_s = 1.3\, l_d$.
- Stirrups shall be computed based on shear force V_u and shall have a maximum spacing as shown in the figure

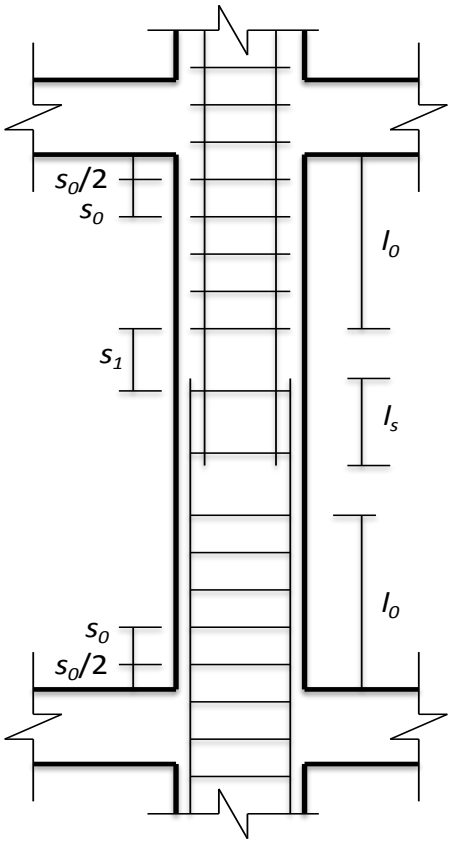

where:

$$s_0 = Min\begin{Bmatrix}\text{least column dimension}/2\\ 8d_b\\ 24d_s\\ 300\text{ mm}\end{Bmatrix}$$

$$s_1 = Min\begin{Bmatrix}\text{least column dimension}\\ 16d_b\\ 48d_s\end{Bmatrix}$$

l_d = development length of the steel reinforcement in tension

$$l_0 = Max\begin{Bmatrix}\text{clear height of column}/6\\ \text{maximum column dimension}\\ 450\text{ mm}\end{Bmatrix}$$

Structural Details (Special Frames)

- **Beams ($P_u \leq 0.1\, A_g\, f'_c$)**
- Clear span of beam ≥ 4*d*, where: *d* = effective depth of beam.
- Beam width ≥ $min\begin{Bmatrix} 0.3h \\ 250\ \text{mm} \end{Bmatrix}$, where: *h* = total depth of beam.
- Width of beam ≤ width of supporting column + x
- where: x = $min\begin{Bmatrix} \text{least column dimension} \\ 0.75\ \text{maximum column dimension} \end{Bmatrix}$,
- At least two top and bottom bars shall be continuous and extended l_d in the columns.
- Steel ratio (ρ) at any section shall not exceed 0.025.

Structural Details (Special Frames)

- **Beams ($P_u \leq 0.1\, A_g\, f'_c$)**
- The beam shall be designed to resist V_u taken as shown in the figure:

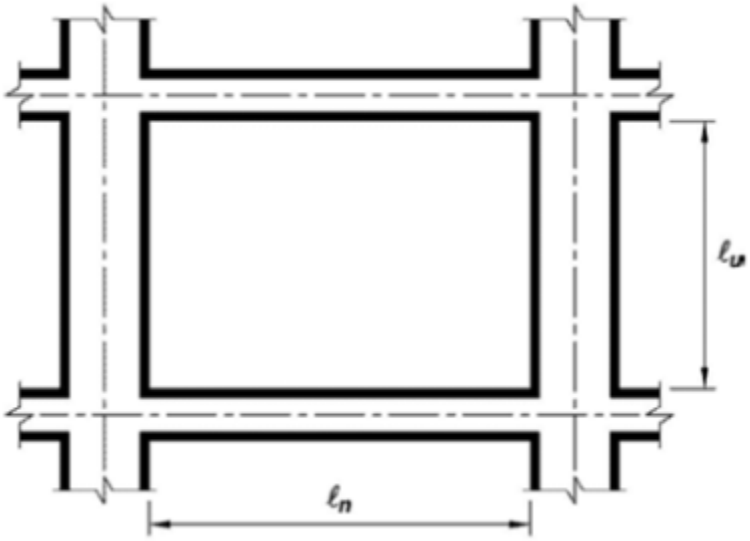

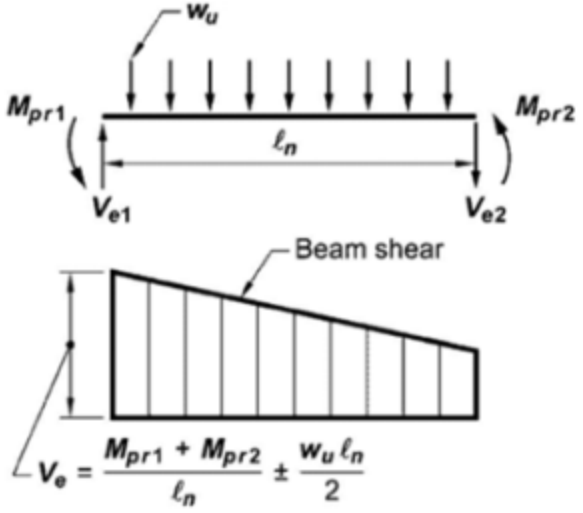

where: M_{pl} and M_{pr} = maximum probable moment capacities at left and right ends of beam, respectively, computed at face of beam-column joints in the direction shown in the figure above using steel strength = 1.25 F_y.

Structural Details (Special Frames)

- **Beams ($P_u \leq 0.1\, A_g\, f'_c$)**
- Bottom steel at face of joint ≥ 1/2 top steel at face of joint
- Bottom or top steel at any section ≥ 1/4 top steel at face of joint
- Stirrups shall be computed based on shear force V_u and shall have a maximum spacing as shown in the figure

where:

$$s_1 = Min\begin{Bmatrix} 150\ \text{mm} \\ 6d_b \\ d/4 \end{Bmatrix}$$

$s_2 = d/2$

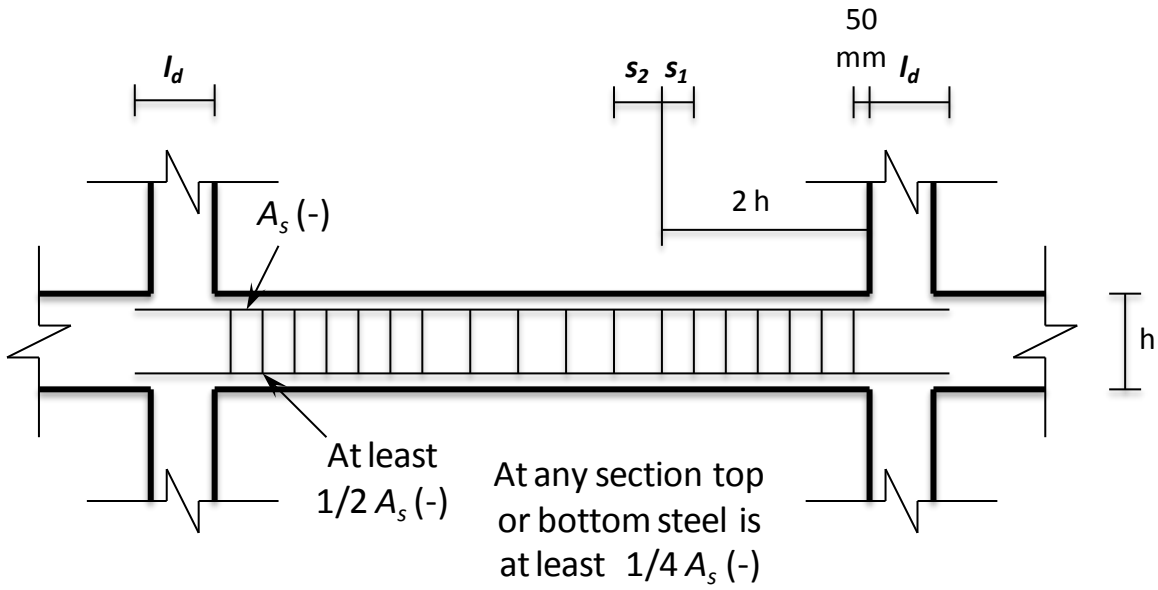

Structural Details (Special Frames)

- **Beams ($P_u \leq 0.1\, A_g\, f'_c$)**
- In computing stirrup spacing, concrete strength shall be ignored if:
  - Shear due to earthquake ≥ ½ maximum ultimate shear force in the beam, and
  - $P_u < 0.05\, A_g\, f'_c$
- In the region where congested stirrups are used, longitudinal bars shall be supported by crossties. The distance between supported bars shall not exceed 450 mm. Details are shown in the figure below.

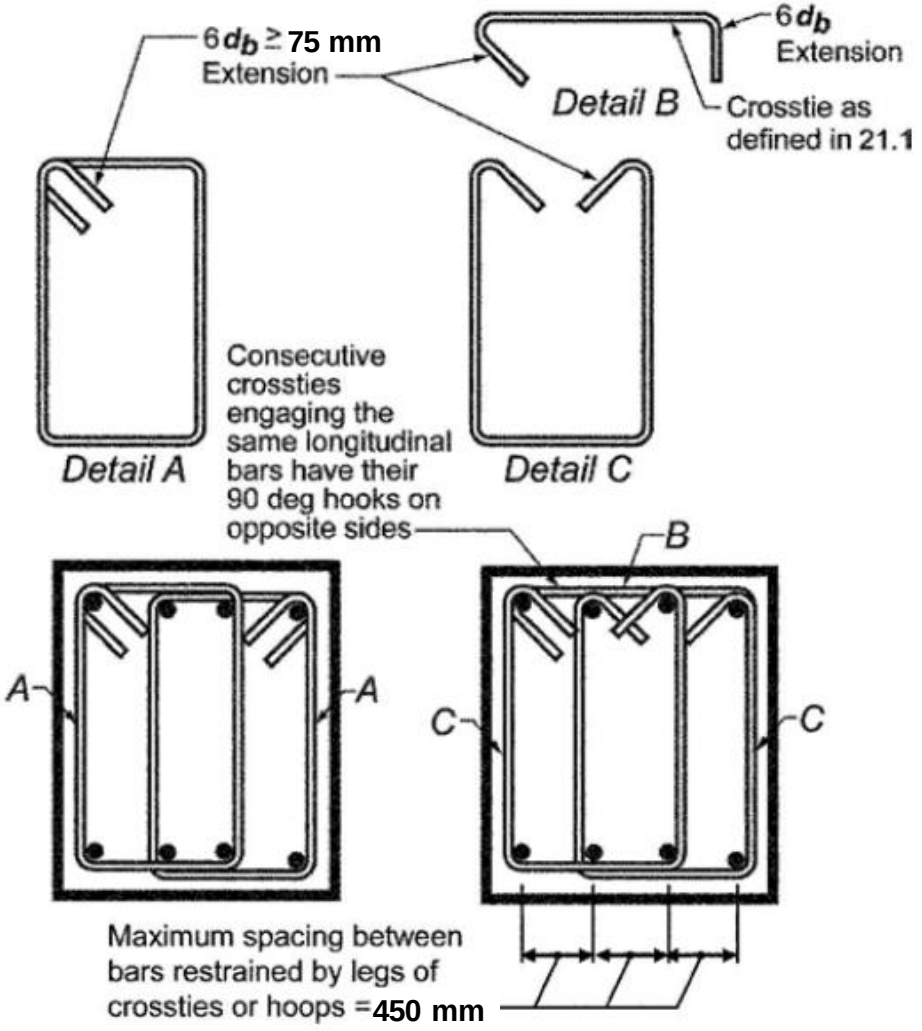

Structural Details (Special Frames)

- **Columns ($P_u > 0.1\ A_g f'_c$)**
- If c_1 and c_2 are the dimensions of column cross section, $c_1 \geq c_2$, then:
  - c_2 shall be ≥ 300 mm
  - c_2 shall be ≥ 0.4 c_1
- The column must satisfy the following equation:

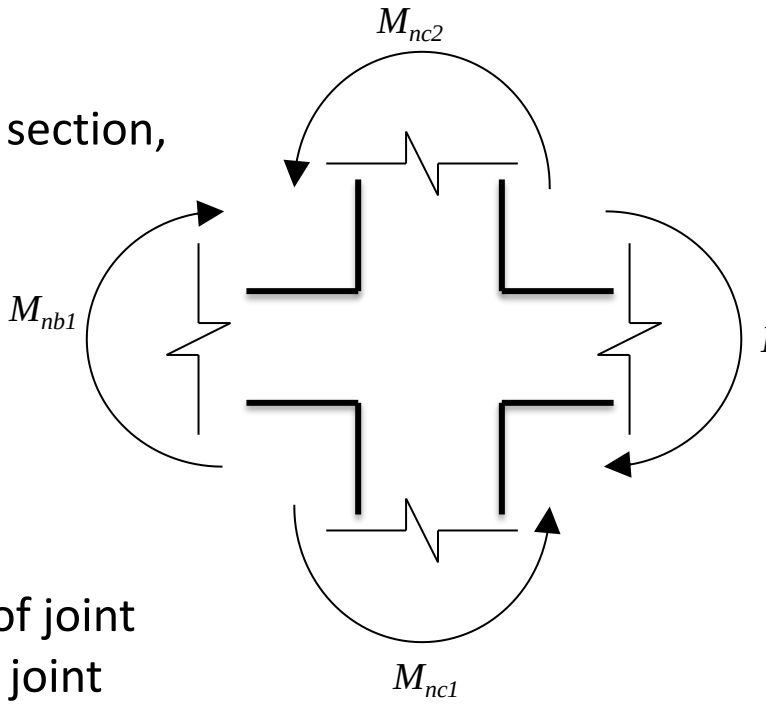

$$\sum M_{nc} > 6/5 \sum M_{nb}$$

where:

$\sum M_{nc}$: sum of flexural strength of columns at face of joint

$\sum M_{nb}$: sum of flexural strength of beams at face of joint

Otherwise, the column shall be ignored in computing the strength and stiffness of the structure.

Structural Details (Special Frames)

- **Columns ($P_u > 0.1\, A_g\, f'_c$)**
- The column shall be designed to resist V_u taken as shown in the figure below:

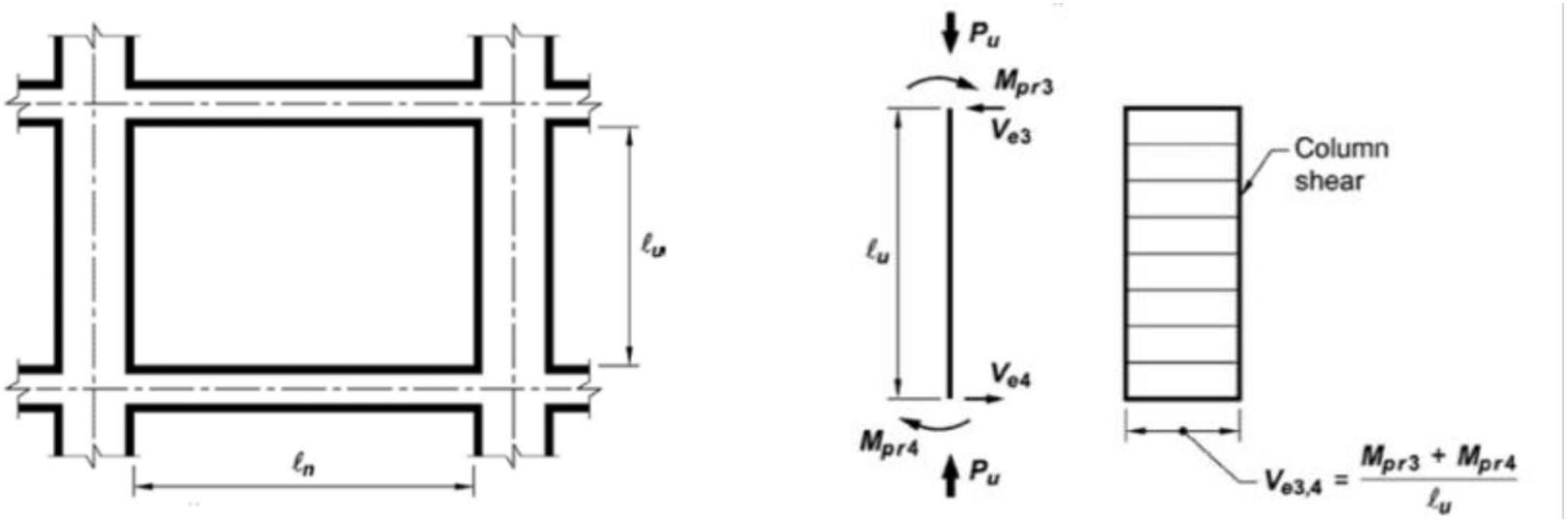

where: M_{pr3} and M_{pr4} = maximum probable moment capacities at top and bottom ends of column, respectively, computed at face of beam-column joints in the direction shown in the figure above using steel strength = 1.25 F_y.

Structural Details (Special Frames)

- **Columns ($P_u > 0.1\, A_g\, f'_c$)**
- ρ shall be between 1% and 6%.
- In circular columns, the number of bars shall be at least 6.
- Lap splice of bars shall be used at mid-height of the column with lap splice length, $l_s = 1.3\, l_d$.
- Stirrups shall be computed based on shear force V_u and shall have a maximum spacing as shown in the figure

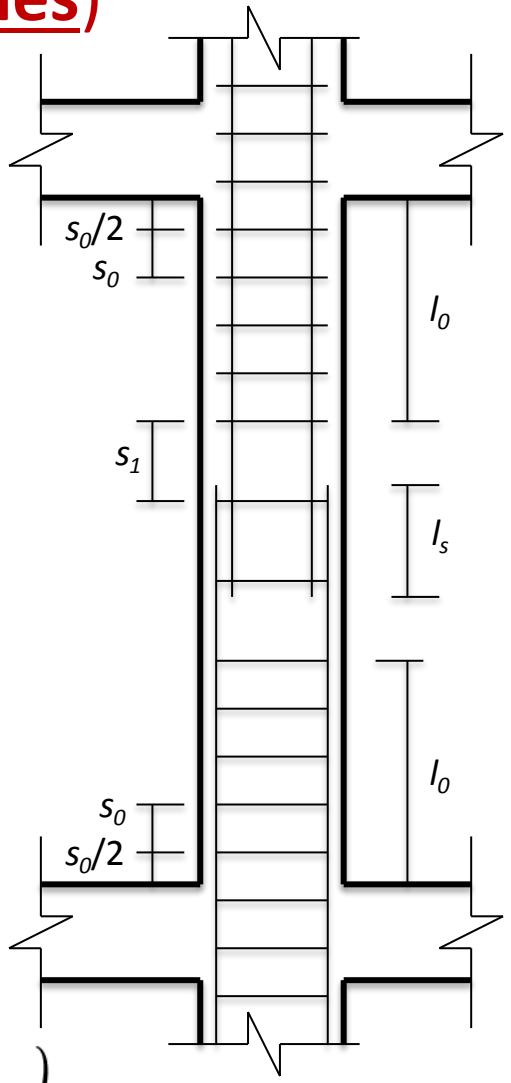

where:

$$s_0 = Min \begin{Bmatrix} \text{least column dimension}/4 \\ 6d_b \\ 100 + (350 - h_x)/3 \\ 150 \text{ mm} \end{Bmatrix} \geq 100 \text{ mm}$$

$$s_1 = Min \begin{Bmatrix} \text{least column dimension} \\ 6d_b \\ 48d_s \\ 150 \text{ mm} \end{Bmatrix}$$

h_x = maximum horizontal spacing of crossties.

l_d = development length of the steel reinforcement in tension

$$l_0 = Max \begin{Bmatrix} \text{clear height of column}/6 \\ \text{maximum column dimension} \\ 450 \text{ mm} \end{Bmatrix}$$

Structural Details (Special Frames)

- **Columns ($P_u > 0.1\, A_g\, f'_c$)**
- Within area of congested transverse reinforcement (ends of columns), crossties shall be used as shown in the figure below:

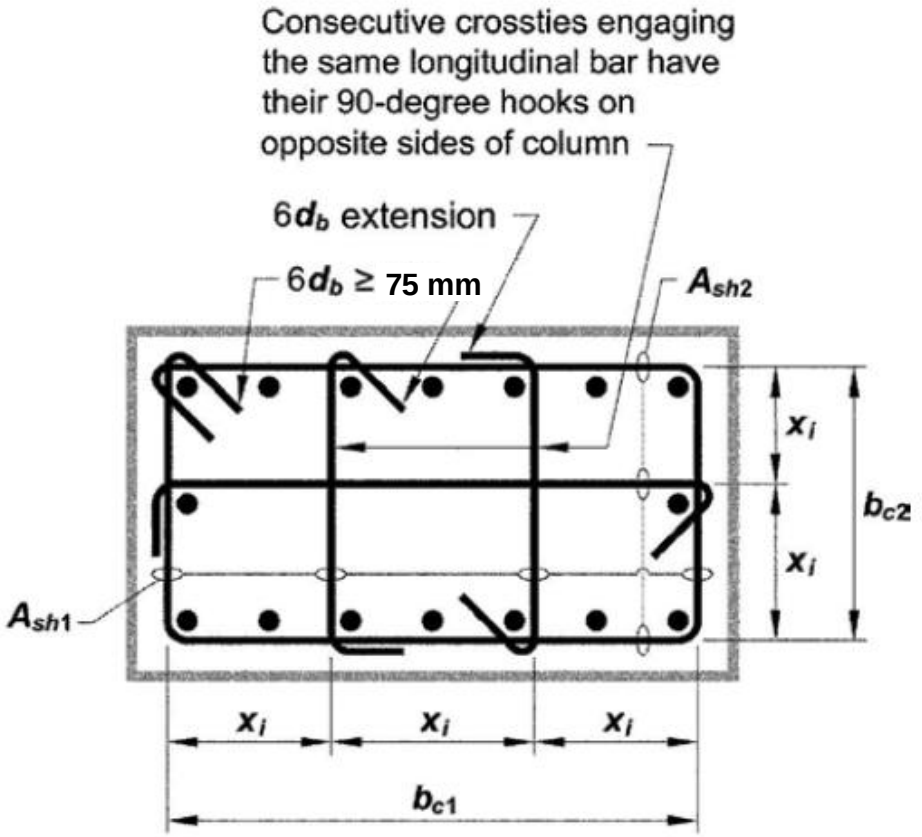

The dimension x_i from centerline to centerline of tie legs is not to exceed **450 mm.** The term h_x used in equation 21-2 is taken as the largest value of x_i.

Structural Details (Special Frames)

- **Columns ($P_u > 0.1\, A_g\, f'_c$)**
- Within area of congested transverse reinforcement, minimum amount of transverse shall be provided such that:
  - For spiral reinforcement: $\rho_s \geq 0.12\, f'_c / F_y$
  - For rectangular hoops: $A_{sh} = max \left\{ \begin{matrix} \frac{0.3 s b_c f'_c}{F_y} \left(\frac{A_g}{A_{ch}} - 1 \right) \\ \frac{0.09 s b_c f'_c}{F_y} \end{matrix} \right\}$

where:

- ρ_s = volume of transverse steel/ volume of concrete core.
- A_{sh} = total cross sectional area of hoop reinforcement in the direction of concern.
- b_c = width of concrete core normal to stirrup legs.
- A_{ch} = area of concrete core.
- A_g = gross area column cross section.

Example:

Compute the minimum amount of transverse reinforcement required in the congested transverse reinforcement for a concrete column in a special frame. Assume the following properties for the column:

- Column cross sectional width = 500 mm
- Column cross sectional length = 700 mm
- Cover to center of stirrup = 45 mm.
- Stirrup spacing = 100 mm
- f'_c = 28 MPa
- F_y = 420 MPa.

Solution:

The dimensions b_{c1} and b_{c2} shown in the above figure can be computed as follows:

b_{c1} = 610 mm $\qquad\qquad$ b_{c2} = 410.

Thus, the minimum amount of required transverse reinforcement normal to b_{c1} is give as follows:

$$A_{sh1} = max\left\{\begin{matrix}\frac{0.3\times100\times610\times28}{420}\left(\frac{700\times500}{610\times410}-1\right)\\ \frac{0.09\times100\times610\times28}{420}\end{matrix}\right\} = 487\ mm^2 \Rightarrow 5\phi12\ \text{mm}$$

Similarly, in the other direction the amount will be:

$$A_{sh1} = max\left\{\begin{matrix}\frac{0.3\times100\times410\times28}{420}\left(\frac{700\times500}{610\times410}-1\right)\\ 0.09\times100\times410\times28\end{matrix}\right\} = 328\ mm^2 \Rightarrow 3\phi12\ \text{mm}$$

Beam-Column Joint

- The width of the beam-column joint shall be at least 20 d_{b_max}, where:
  d_{b_max} = maximum diameter of longitudinal bars.
- Joints dimension shall be selected such that V_n is not larger than:
  - For confined joints on 4 sides
    $1.7\sqrt{f'_c}A_j$
  - For confined joints on 3 sides or two opposite sides $1.2\sqrt{f'_c}A_j$
  - For others $1.0\sqrt{f'_c}A_j$
- where: A_j = the effective area of joints as shown in the figure below:

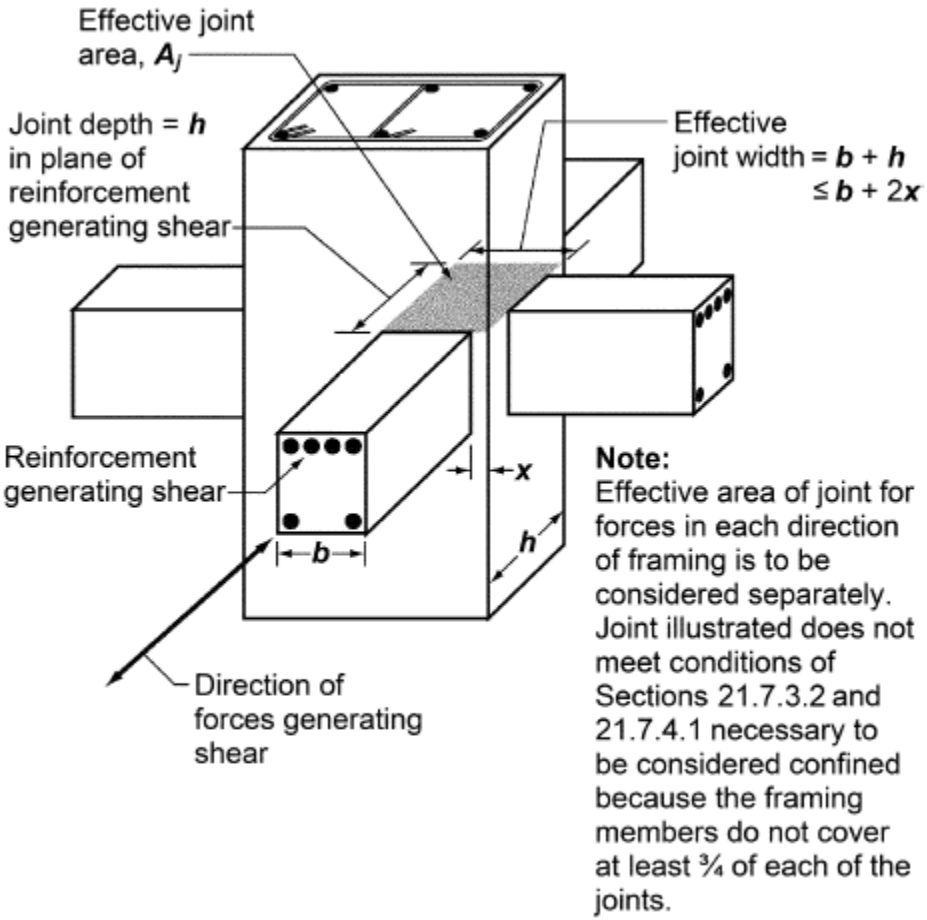

Note:
Effective area of joint for forces in each direction of framing is to be considered separately. Joint illustrated does not meet conditions of Sections 21.7.3.2 and 21.7.4.1 necessary to be considered confined because the framing members do not cover at least ¾ of each of the joints.

Example:

In the above figure, check the adequacy of the joint dimension to transfer an ultimate shear force of 1500 kN. Assume the following:

- b = 400 mm
- h = 500 mm
- x = 100 mm.
- f'_c = 28 MPa

Solution:

Effective joint width =

$$min\begin{Bmatrix}400 + 2 \times 100\\ 400 + 500\end{Bmatrix} = 600 \text{ mm}$$

Joint depth = h = 500 mm

V_n = 1500/0.75 = 2000 kN

Joint is confined on four sides. Thus,

$$1.7\sqrt{f'_c}A_j = 1.7\sqrt{28} \times 500 \times 600 \times 10^{-3}$$

$$= 2699\ kN > V_n$$

Hence, joint dimensions are ok.

Structural Details (Shear wall)

- Once shear wall is analyzed, 5 internal ultimate forces can be computed; namely, P, V_x, V_y, M_x and M_y. The design for these forces can be performed as follows:
  - Proportion the wall such that $V_x \leq \phi V_c$.
  - Design for V_y in a way similar to beams.
  - Design for M_y can be carried out by assuming two equal areas of steel on both faces of the wall working as a couple (one is in tension and the other is in compression).
  - Design for P and M_x in a way similar to columns.

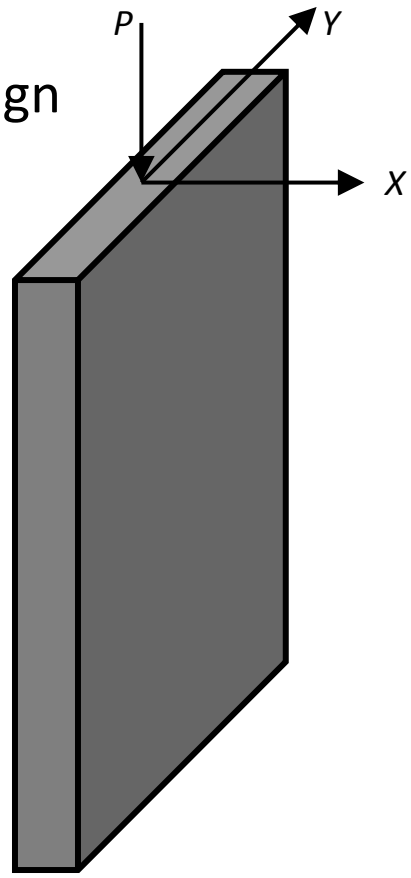

Structural Details (Shear wall)

- For special structural wall:
  - Steel ratio in vertical and horizontal directions (ρ_l, ρ_t) shall be ≥ 0.0025.
  - Two layers of steel shall be used if $V_{uy} > V_{cy}$, where V_{uy} = ultimate shear force in the y direction shown in the figure above. V_{cy} = concrete shear capacity in the y direction shown in the figure above.
  - Shear strength of concrete, $V_{cy} = \frac{1}{6}\sqrt{f'_c}(0.8l_w)t$, where l_w = wall length and t = wall thickness.
  - If $h_w/l_w \leq 2$, ρ_l shall be ≥ ρ_t

Example:

Design an intermediate reinforced concrete wall to carry the ultimate loads given below:

- P_u = 2700 kN
- M_{uy} = 20 kN.m
- M_{ux} = 750 kN.m
- V_{uy} = 450 kN
- V_{ux} = 20 kN

Assume: f'_c = 24 MPa, F_y = 420 MPa, wall thickness = 200 mm, wall length = 1.5 m and wall height = 3.5 m.

Solution:

Check shear in X direction

V_{ux} = 20 kN

$$\phi V_c = 0.75 \times \frac{1}{6} \times \sqrt{24} \times (200 - 40) \times 1500 \times 10^{-3} = 147 \text{ kN} > V_{ux} \quad \text{OK}$$

Design for shear in Y direction

V_{ux} = 450 kN

$$V_c = \frac{1}{6} \times \sqrt{24} \times 200 \times (0.8 \times 1500) \times 10^{-3} = 196 \text{ kN}$$

V_s = 450/0.75 – 196 = 404 kN < V_{smax} = 4 × 196 = 784 kN

$$\frac{A_v}{s} = \frac{404000}{420 \times (0.8 \times 1500)} = 0.8 \text{ mm} > \frac{A_v}{s} min$$

Also this means that $\rho_t = \frac{0.8}{200} = 0.004 > 0.025$ OK

Assume 2ϕ12 mm Av = 226 mm s = 283 mm

Solution:

Design for moment around Y axis

M_{uy} = 20 kN.m d' = 40 mm d = 160 mm

$$A_s = \frac{M_{uy}}{\emptyset F_y (d - d')} = \frac{20 \times 10^6}{0.9 \times 420 \times (160 - 40)} = 441 \text{ mm}^2 \text{ on each side of the wall}$$

Design for axial force and moment around X axis

M_{uy} = 750 kN.m P_u = 2700 kN

b = 200 mm h = 1500 mm

Using the interaction diagram shown below, the following values for steel ratio and area of steel are obtained:

$\rho = 0.00678$ $A_s = 2034 \text{ mm}^2$ or 1017 mm² on each side

olution:

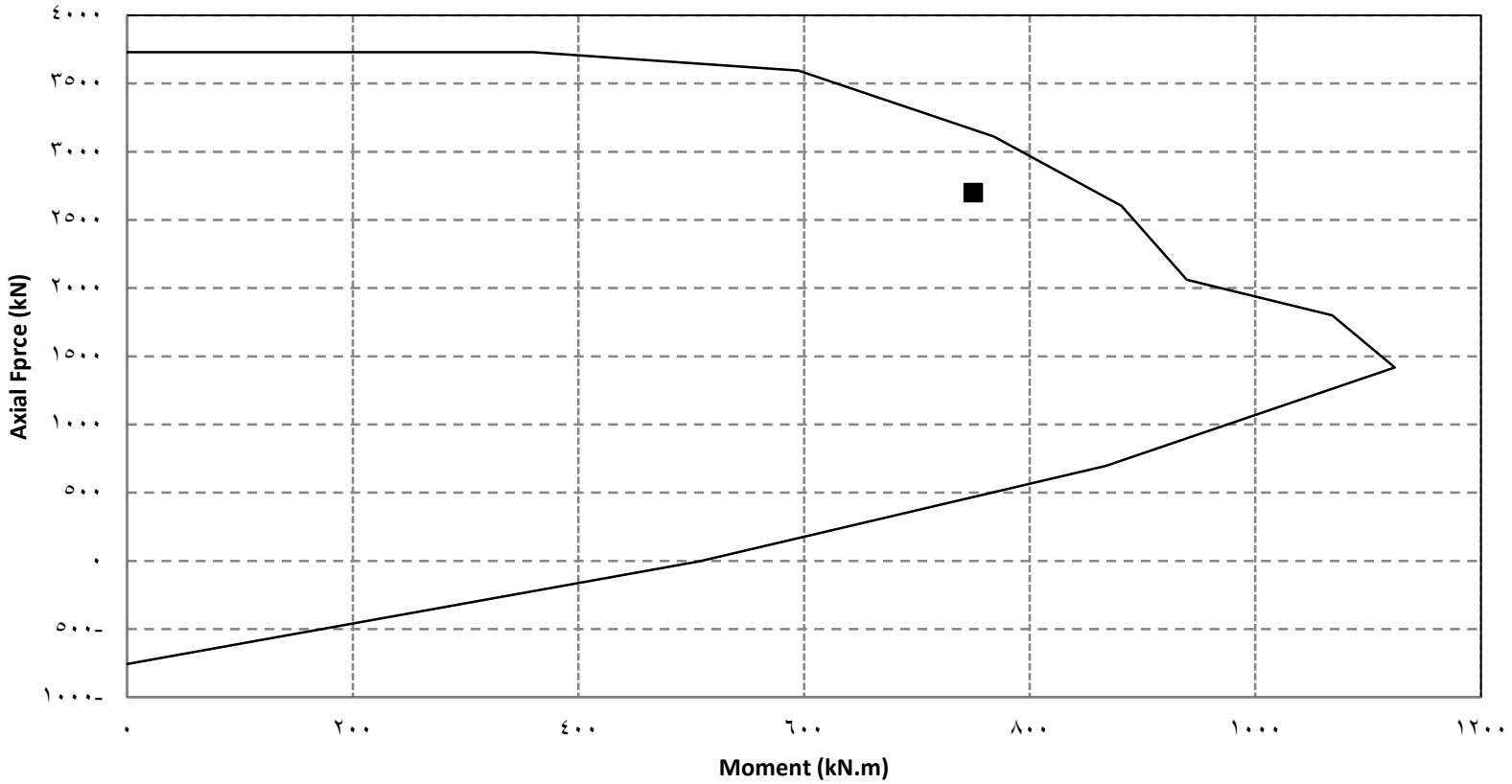

Thus, total area of steel on each side is 1017+ 441 = 1458 mm^2

Assume ϕ14 mm Use 10ϕ14 mm on each face.

Structural Details (Foundation:)

- Columns or boundary members supported close to the edge of the foundation, as often occurs near property lines as shown in the figure below, shall have congested shear reinforcement in the top half of the footing. The spacing of such reinforcement is as given for special concrete columns.

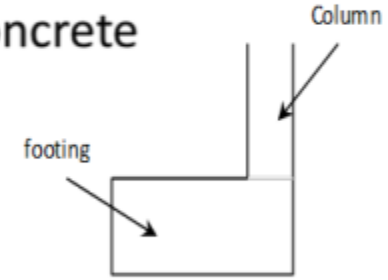

- Tie beams longitudinal reinforcement shall extend l_d in the columns.
- Minimum cross sectional dimension of tie beam shall be ≥ $L_n/20$, but ≤ 450 mm.

Structural Details (Foundation:)

- For slabs without beams, transverse reinforcement shall be added at slab-column connection unless:
  - Concrete is designed to carry the stresses resulting from shear and moment transferred through shear at the ultimate load combination.
  - Story drift/story height = $max\begin{Bmatrix} 0.005 \\ 0.035 - 0.05(V_{ug}/\emptyset V_c) \end{Bmatrix}$
- Where: V_{ug}= ultimate shear force, ϕV_c = shear capacity of concrete at connection.
- Shear transverse reinforcement provided at slab-column connection in two way slab without beams shall extend at least four times the slab thickness from the face of the support.

Structural Analysis and Design

The structural analysis of building frames or of the building three dimensional models can be achieved using a commercial computer program like Sap2000.

In this section an interior frame of the building in example 1 will be analyzed and designed using **Sap2000 version 14.2.4**.

Figure 9 shows the structural model of the frame and the applied lateral seismic forces.

Structural Analysis and Design

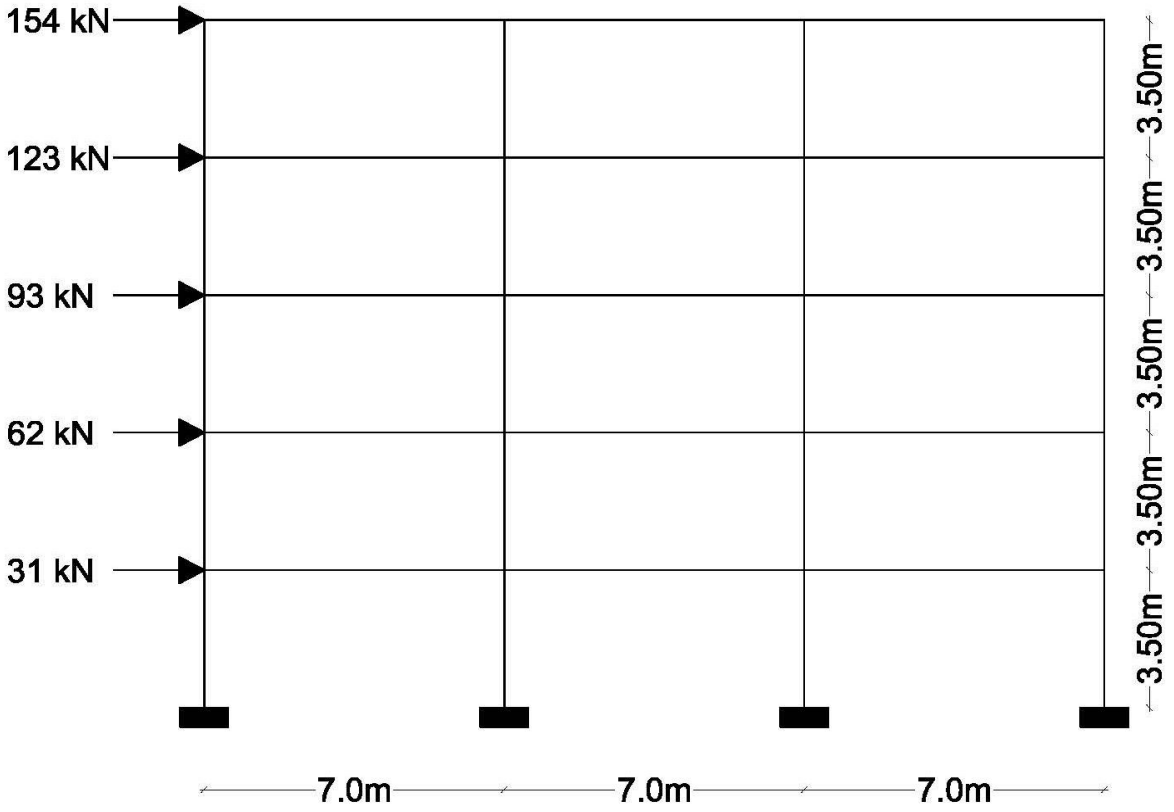

Figure 9: Lateral seismic forces to interior frame in example 1

Structural Analysis and Design

The loads on the slab are:

Slab own weight= 0.2x25=5 kN/m^2

Superimposed dead load= 4 kN/m^2

Live load= 3 kN/m^2

Structural Analysis and Design

The interior frame carries a tributary width of slab equal to 5m, therefore

Dead load on the frame= 5x(5+4)= 45 kN/m (beam weight is not included)

Live load on the frame= 5x3= 15 kN/m

Figures 10 and **11** shows the loads on the frame.

Structural Analysis and Design

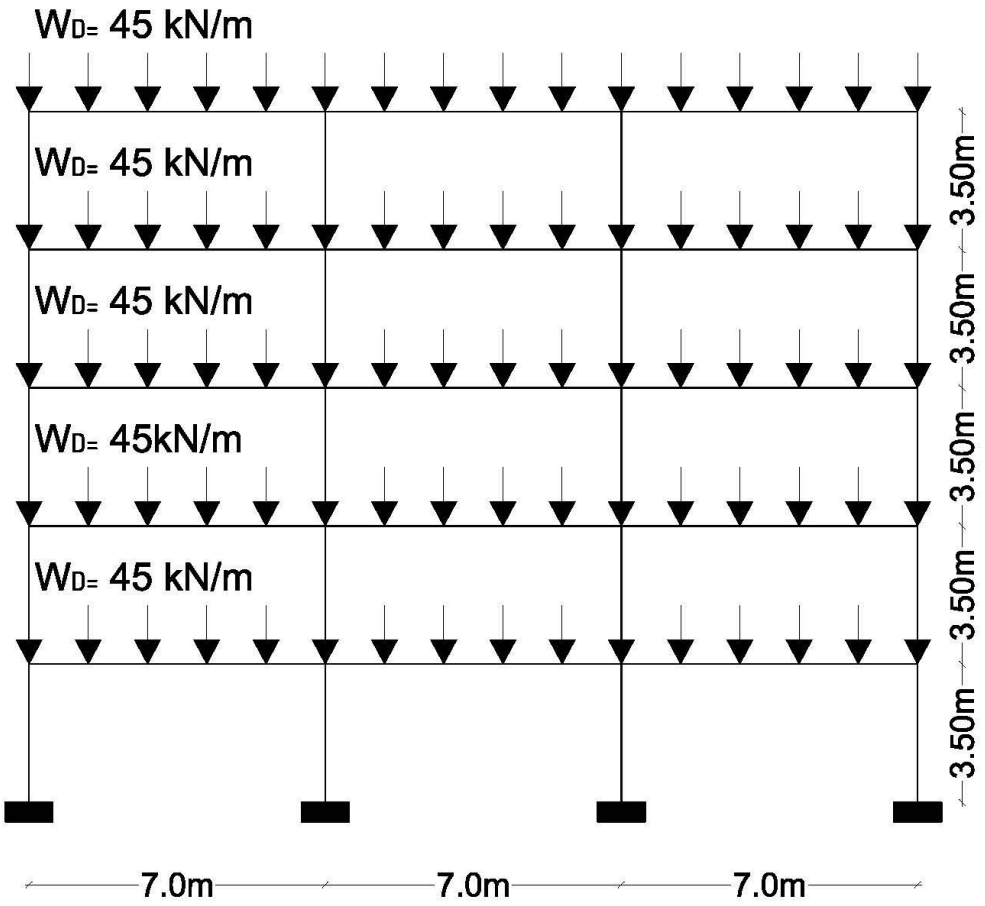

Figure 10: Dead loads to interior frame in example 1

Structural Analysis and Design

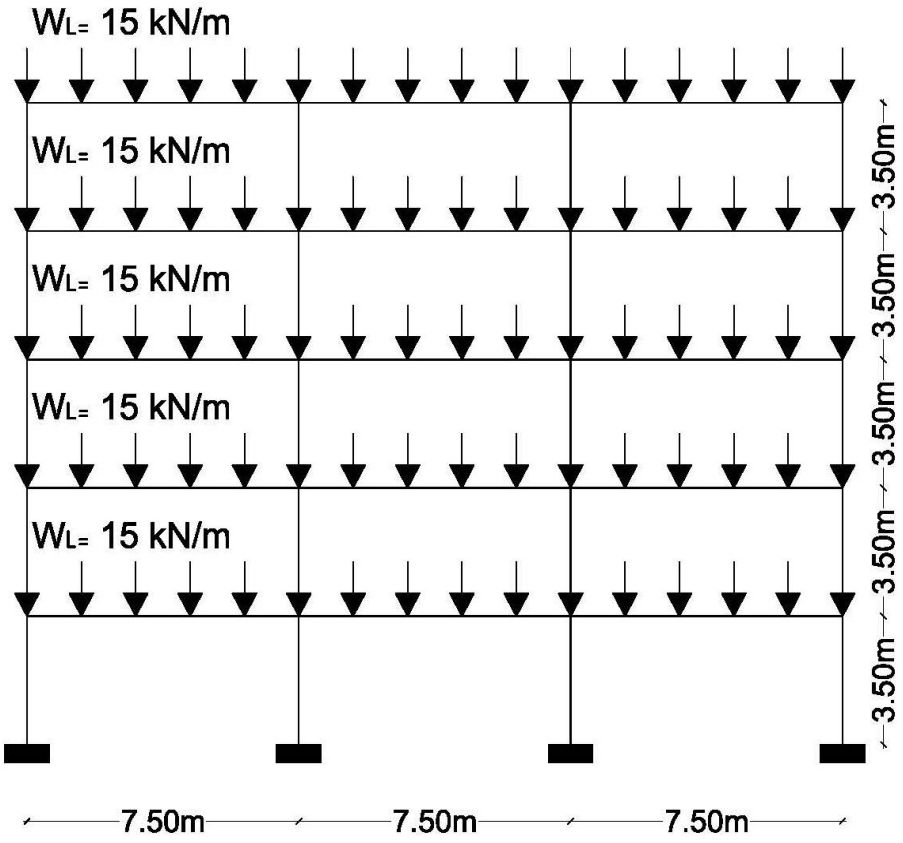

Figure 11: Live loads to interior frame in example 1

Structural Analysis and Design

- **Frame properties:**

Columns are 500x500mm

Beams are 300x600mm rectangular section

- **Material properties:**

Concrete, f'_c= 28 MPa

Steel, f_y= 420 MPa

Concrete, E_c= 24800 Mpa

Concrete unit weight= 25 kN/m^3

Structural Analysis and Design

- **Load combinations (ACI 318-08):**
  1. U1= 1.4D
  2. U2= 1.2D+1.6L
  3. U3= 1.2D+1.0L+1.0E
  4. U4= 0.9D+1.0E
- **Frame type:**

Intermediate moment resisting frame

Note: weight of beams and columns will be considered in dead loads by **Sap2000**

The following pages show Sap2000 analysis and design results.

Structural Analysis and Design

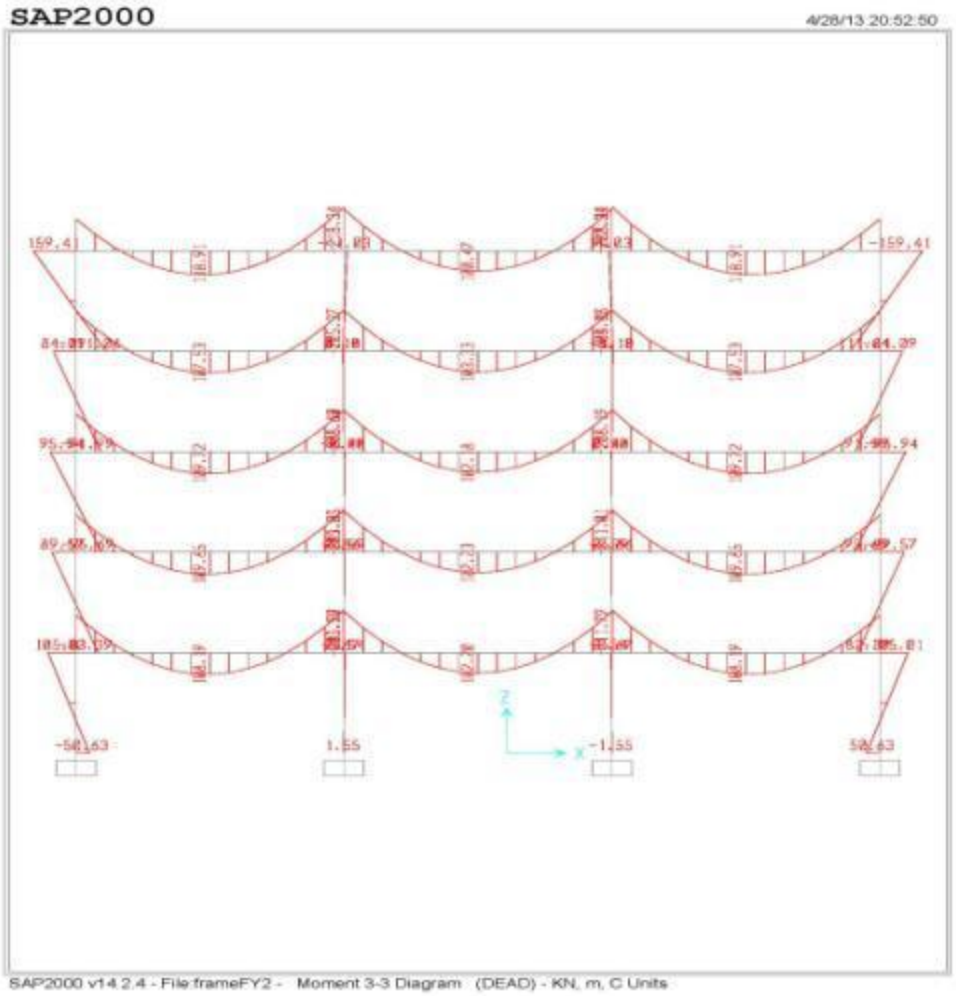

Structural Analysis and Design

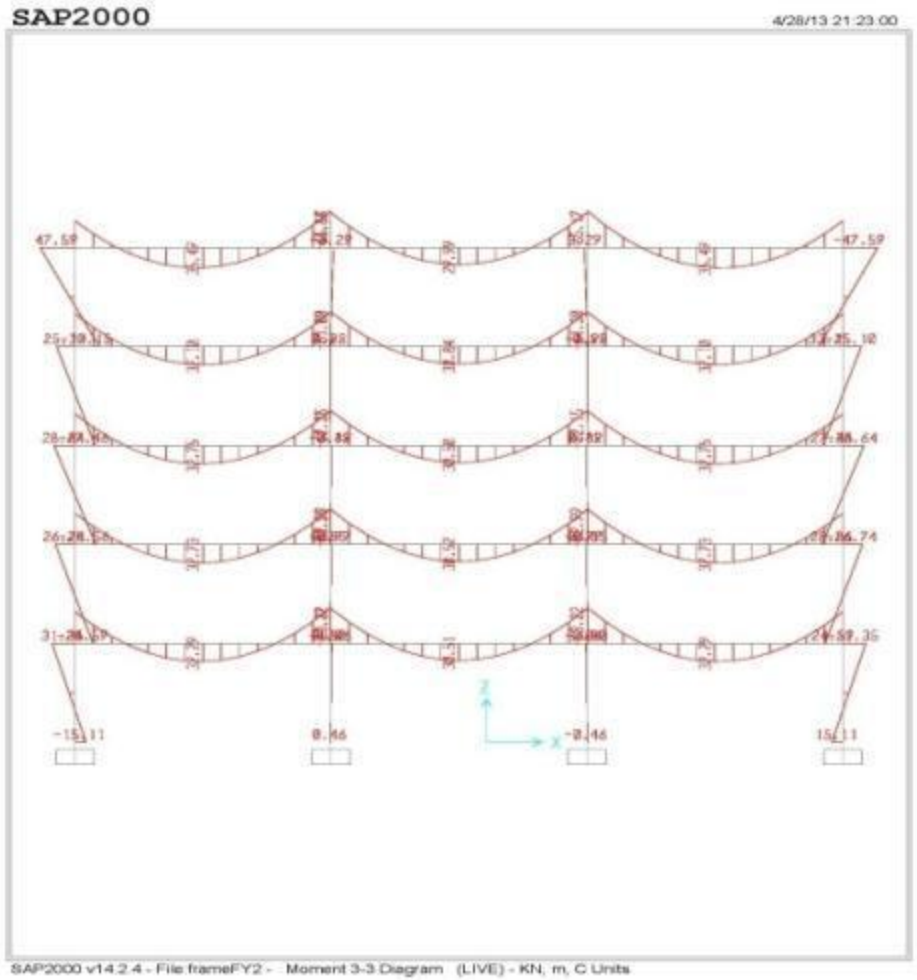

Structural Analysis and Design

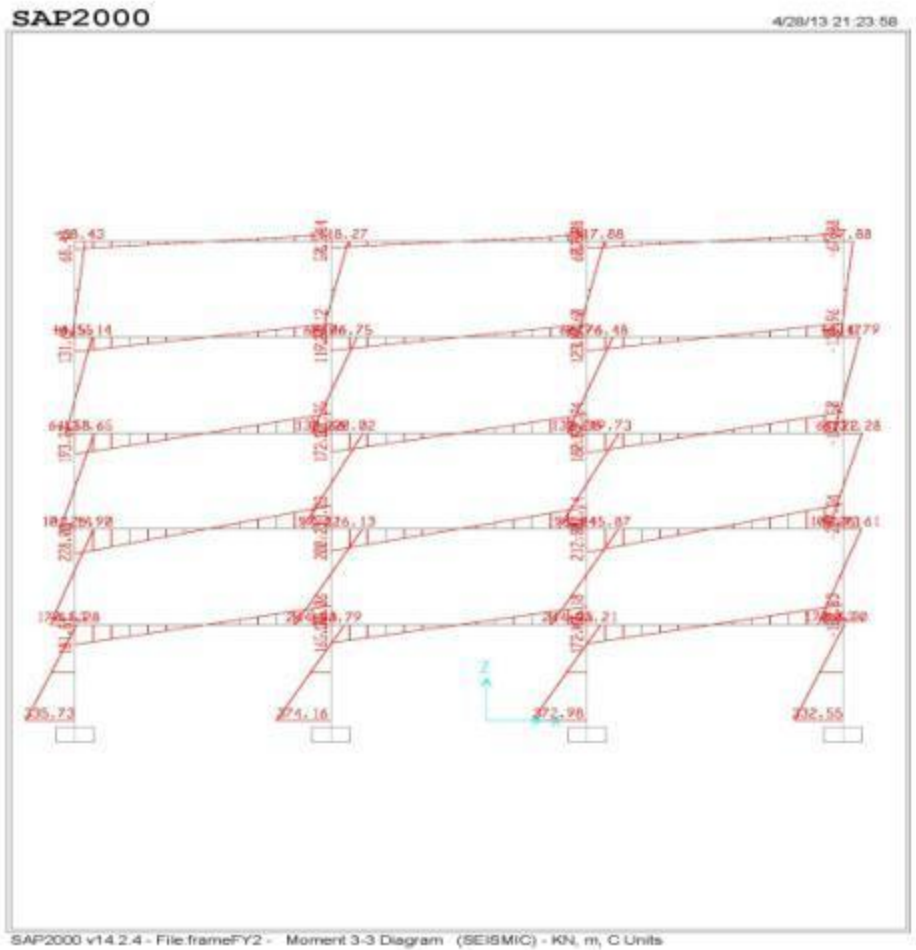

Structural Analysis and Design

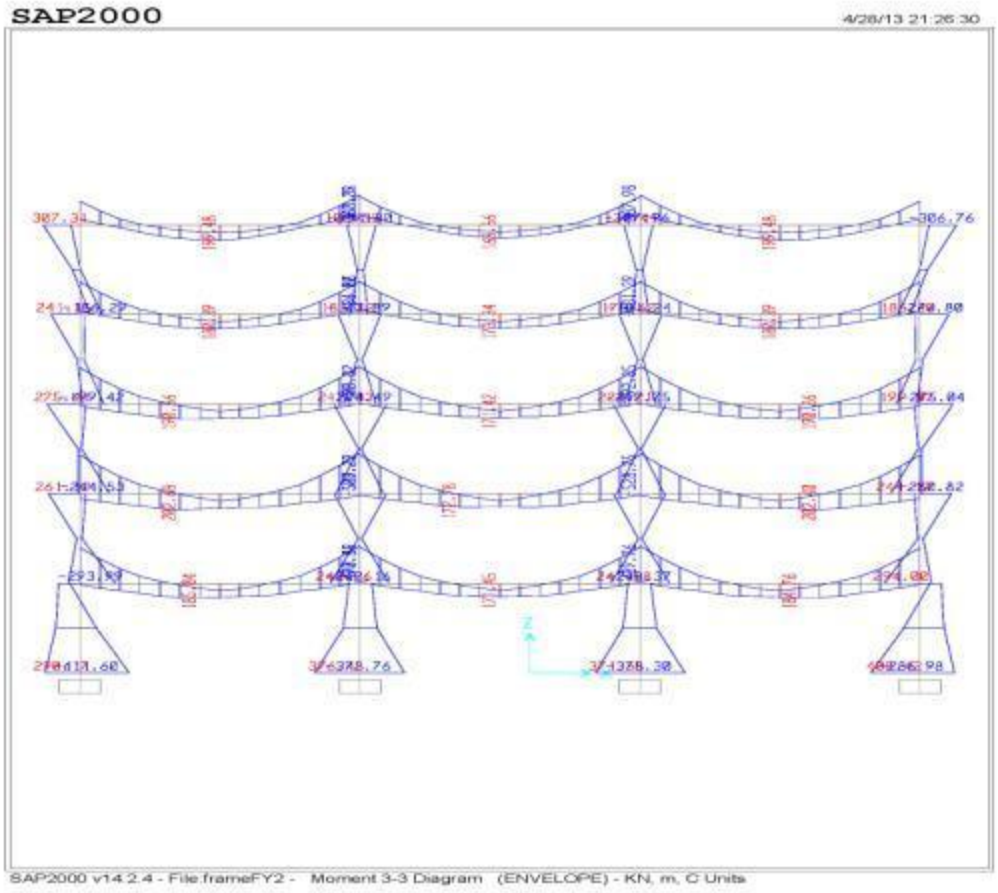

Structural Analysis and Design

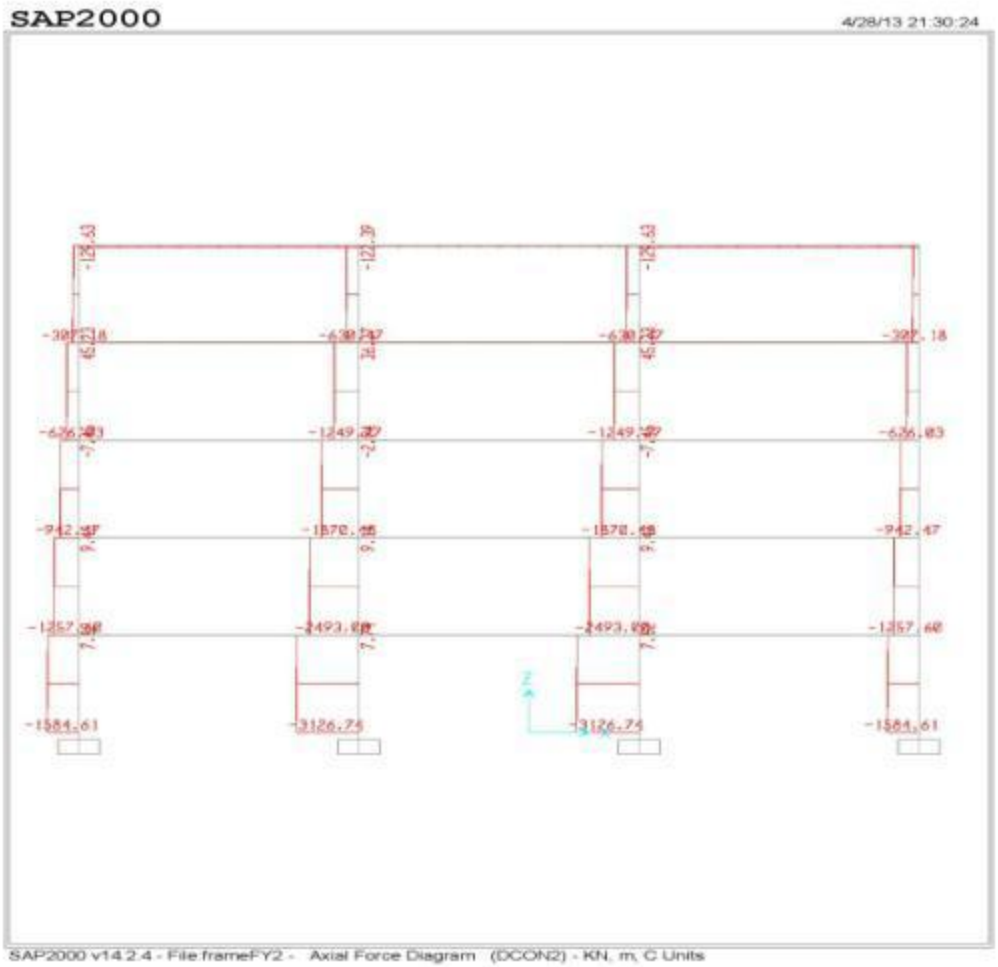

Structural Analysis and Design

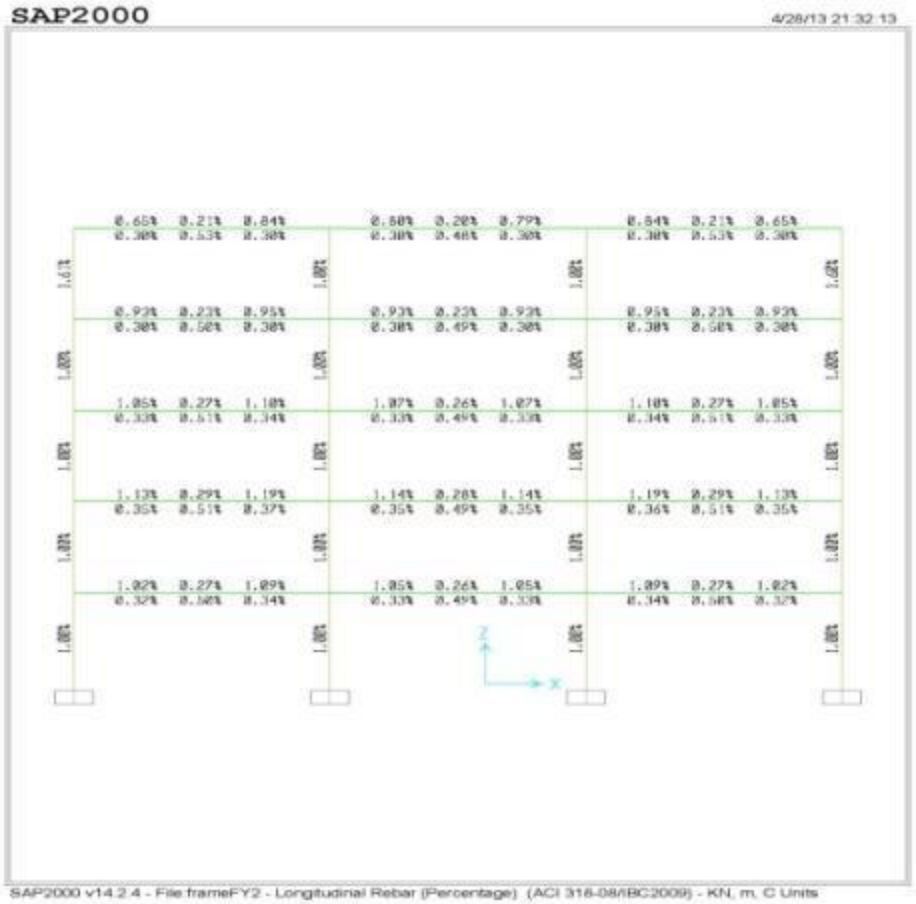

Structural Analysis and Design

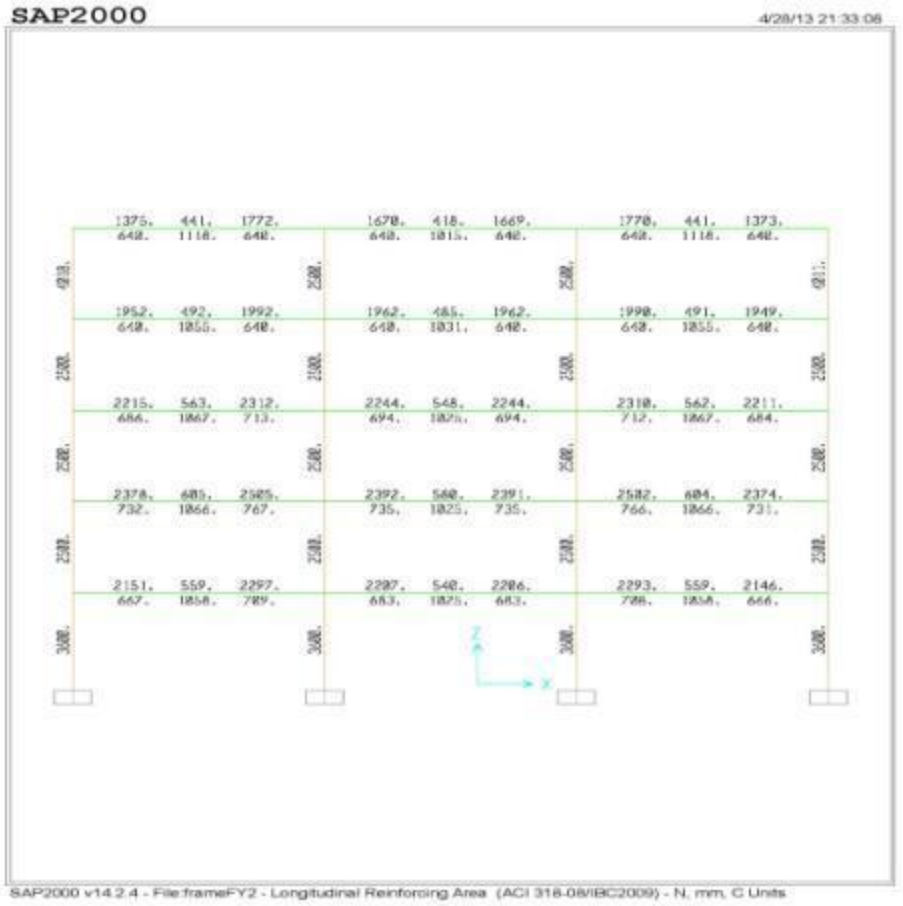

Structural Analysis and Design

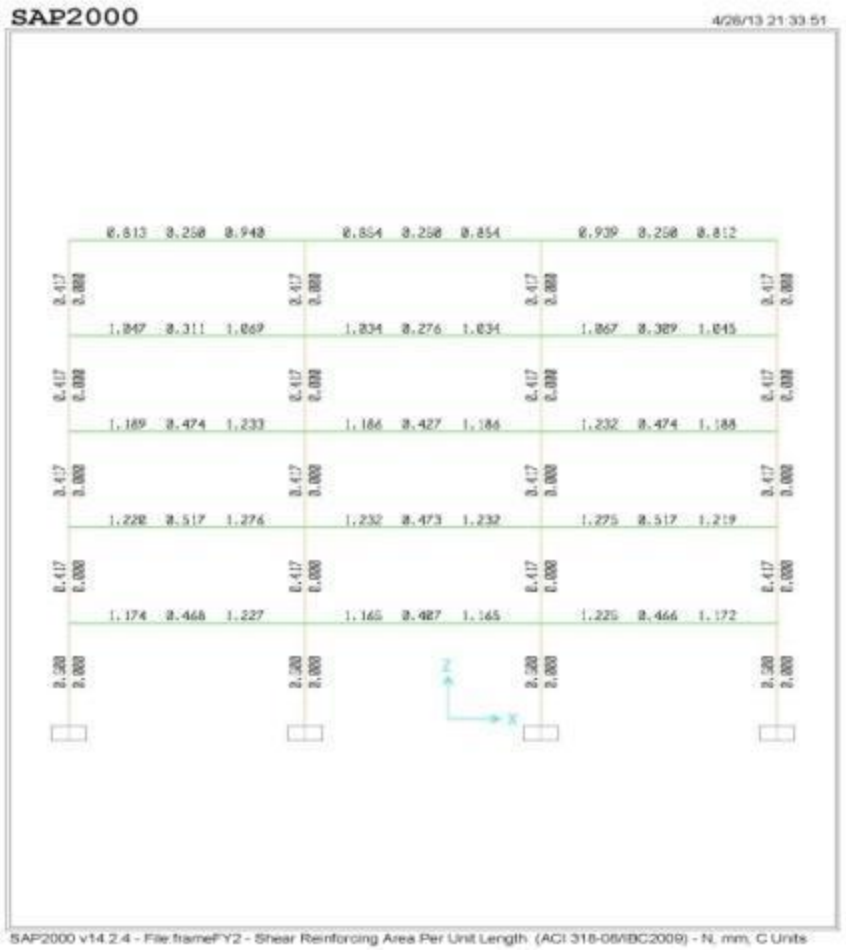

Structural Analysis and Design

Other frames can be taken from examples 2 and 3 and can be analyzed and designed using Sap2000

Frames can be braced by end shear walls or by infill concrete walls.

Examples will be taken on these subjects during the training course

Notes (ASCE 2010): (Direction of loading:)

- **ASCE 12.5.2 Seismic Design Category B:**

For structures assigned to Seismic Design Category B, the design seismic forces are permitted to be applied independently in each of two orthogonal directions and orthogonal interaction effects are permitted to be neglected.

Notes (ASCE 2010): (Direction of loading:)

- **ASCE 12.5.3 Seismic Design Category C:**

Loading applied to structures assigned to Seismic Design Category C shall, as a minimum, conform to the requirements of Section 12.5.2 for Seismic Design Category B and the requirements of this section. Structures that have horizontal structural Irregularity Type 5 in Table 12.3-1 shall use one of the following procedures:

Notes (ASCE 2010): (Direction of loading:)

- **ASCE 12.5.3 Seismic Design Category C:**

a) Orthogonal Combination Procedure. The structure shall be analyzed using the equivalent lateral force analysis procedure of Section 12.8, the modal response spectrum analysis procedure of Section 12.9, or the linear response history procedure of Section 16.1, as permitted under Section 12.6, with the loading applied independently in any two orthogonal directions. The requirement of Section 12.5.1 is deemed satisfied if members and their foundations are designed for 100 percent of the forces for one direction plus 30 percent of the forces for the perpendicular direction. The combination requiring the maximum component strength shall be used

Notes (ASCE 2010): (Direction of loading:)

- **ASCE 12.5.3 Seismic Design Category C:**

b) Simultaneous Application of Orthogonal Ground Motion. The structure shall be analyzed using the linear response history procedure of Section 16.1 or the nonlinear response history procedure of Section 16.2, as permitted by Section 12.6, with orthogonal pairs of ground motion acceleration histories applied simultaneously.

Notes (ASCE 2010): (Direction of loading:)

- **ASCE 12.5.4 Seismic Design Categories D through F:**
  Structures assigned to Seismic Design Category D, E, or F shall, as a minimum, conform to the requirements of Section 12.5.3. In addition, any column or wall that forms part of two or more intersecting seismic force resisting systems and is subjected to axial load due to seismic forces acting along either principal plan axis equaling or exceeding 20 percent of the axial design strength of the column or wall shall be designed for the most critical load effect due to application of seismic forces in any direction. Either of the procedures of Section 12.5.3 a or b are permitted to be used to satisfy this requirement. Except as required by Section 12.7.3, 2-D analyses are permitted for structures with flexible diaphragms.

Notes (ASCE 2010):
(Modal Response Spectrum Analysis (ASCE SECTION 12.9))

- **ASCE 12.9.1 Number of Modes:**

  An analysis shall be conducted to determine the natural modes of vibration for the structure. The analysis shall include a sufficient number of modes to obtain a combined modal mass participation of at least 90 percent of the actual mass in each of the orthogonal horizontal directions of response considered by the model.

Notes (ASCE 2010):
(Modal Response Spectrum Analysis (ASCE SECTION 12.9))

- **ASCE 12.9.2 Modal Response Parameters:**

  The value for each force-related design parameter of interest, including story drifts, support forces, and individual member forces for each mode of response shall be computed using the properties of each mode and the response spectra defined in either Section 11.4.5 or 21.2 divided by the quantity R/Ie. The value for displacement and drift quantities shall be multiplied by the quantity Cd/Ie.

Notes (ASCE 2010):
(Modal Response Spectrum Analysis (ASCE SECTION 12.9))

- **ASCE 12.9.3 Combined Response Parameters:**

The value for each parameter of interest calculated for the various modes shall be combined using the square root of the sum of the squares (SRSS) method, the complete quadratic combination (CQC) method, the complete quadratic combination method as modified by ASCE 4 (CQC-4), or an approved equivalent approach. The CQC or the CQC-4 method shall be used for each of the modal values where closely spaced modes have significant cross correlation of translational and torsional response.

Notes (ASCE 2010):
(Modal Response Spectrum Analysis (ASCE SECTION 12.9))

- **ASCE 12.9.4 Scaling Design Values of Combined Response:**

  A base shear (V) shall be calculated in each of the two orthogonal horizontal directions using the calculated fundamental period of the structure T in each direction and the procedures of Section 12.8.

Notes (ASCE 2010):
(Modal Response Spectrum Analysis (ASCE SECTION 12.9))

- **ASCE 12.9.4.1 Scaling of Forces:**

  Where the calculated fundamental period exceeds $C_u T_a$ in a given direction, $C_u T_a$ shall be used in lieu of T in that direction. Where the combined response for the modal base shear (V_t) is less than 85 percent of the calculated base shear (V) using the equivalent lateral force procedure, the forces shall be multiplied by $0.85V/ V_t$:

  Where:

  V = the equivalent lateral force procedure base shear, calculated in accordance with this section and Section 12.8

  V_t = the base shear from the required modal combination

Notes (ASCE 2010):
(Modal Response Spectrum Analysis (ASCE SECTION 12.9))

- **ASCE 12.9.4.2 Scaling of Drifts**

  Where the combined response for the modal base shear (V_t) is less than $0.85C_sW$, and where Cs is determined in accordance with Eq. 12.8-6, drifts shall be multiplied by:

  $0.85\ C_s\ W/V_t$.

Geotechnical and foundation Design Considerations

Prepared by:
Isam G. Jardaneh, Ph.D., P.E.

A foundation is the means by which the superstructure interfaces with underlying soil or rock.

When considering seismic environment, one should look at both:

- ✓**Seismic Load, and**
- ✓**What could happen to the supporting soil or rock (liquefaction, land sliding, etc.).**

Selection of a Foundation System

The selection of foundation system for seismic loading will not be different from that for static loading.

- ✓**Isolated (Spread)**
- ✓**Combined**
- ✓**Continuous**
- ✓**Mat (Raft)**
- ✓**Pile**
- ✓**Mat over Piles**

Codes that are commonly used for Foundation Design:

- Uniform Building Code (UBC)
- National Earthquake Hazards Reduction Program (NEHRP)
- Structural Engineering Association of California (SEAOC)

All these codes attempt to establish minimum standards for both design and detailing of the most common foundation systems, the spread footing and pile foundations.

Spread Footing

1. **All three codes allow the soil bearing capacity to be increased by 33% when dead plus live plus seismic loads are considered.**

2. **Strut (Tie Beams) are required to interconnect the spread footing in tension or compression, for a force equal to 10% of the larger of the footing and the column load.**

Example: Allowable bearing capacity can be increased by 33%.

For square footing shown, take B = 2 m and allowable bearing capacity = 200 kN/m2.
The allowable load that can be supported by the footing
Qall = 200 x 4 = 800 kN (allowable load in normal case dead and live load)

Now, if seismic analysis shows that dead, live and seismic loads = 1200 kN.

Is the footing safe or not?

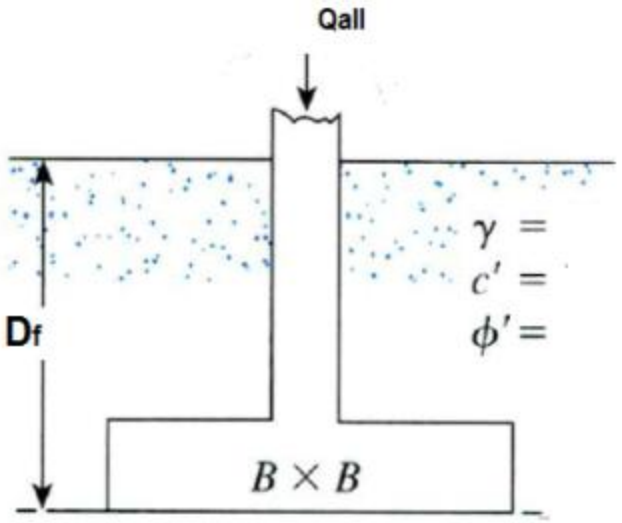

Example: Design of Struts (Tie Beam)

For a given building, the maximum column load (dead, live and seismic) within the whole structure = 2500 kN (250 ton).

Design appropriate tie beams to connect the spread footing in this structure?

Solution:

The tie beam should take in tension or compression 10% of the maximum column load.

10/100 x 2500 = 250 kN (25 ton)

The steel should carry all tension forces = 250 kN.
Hence, Minimum required area of steel equals

As = 250 / (420000*.5) = 11.9 cm2. = 1190 mm2.

It is common practice to have double amount of steel to make the section ductile structure.

Taking into consideration that b ≥ L/20 and d ≥ L/16 and minimum steel = 0.0033 then the cross sectional area of the tie beam can be found.

Pile Foundation

Strut (Tie Beams) Requirements

- Strut (Tie Beams) are required to interconnect pile caps and tops of foundation piers in tension or compression, for a force equal to 10% of the larger of the footing and the column load.

Pile to Pile Cap Connection

- The pile reinforcement must be embedded for the tensile development length without reduction for the excess area of steel.
- The pile must extend 10 cm minimum into the pile cap.

Reinforcing Steel Requirements
(Uncased, poured in place piles)

- Longitudinal reinforcing is required for 5 m minimum.
- As (min.) = 0.005 Ag (Ag: gross cross sectional area) and should be greater than 4φ19 mm.
- Ties shall be spaced at 7.5 cm on center in the top 1.2 m. All ties shall be φ13mm bars unless the pile diameter is less than 50 cm in which case φ10 mm ties may be used.
- In place casting, the height of pouring concrete should not be greater than 1.5 m.

Active Earth Pressure for Earthquake Conditions

$$k_h = \frac{\text{horizontal earthquake acceleration component}}{\text{acceleration due to gravity, } g}$$

$$k_v = \frac{\text{vertical earthquake acceleration component}}{\text{acceleration due to gravity, } g}$$

K_{ae} = active earth pressure coefficient

$$= \frac{\sin^2(\phi' + \beta - \theta')}{\cos\theta' \sin^2\beta \sin(\beta - \theta' - \delta')\left[1 + \sqrt{\dfrac{\sin(\phi' + \delta')\sin(\phi' - \theta' - \alpha)}{\sin(\beta - \delta' - \theta')\sin(\alpha + \beta)}}\right]^2}$$

$$\theta' = \tan^{-1}\left[\frac{k_h}{(1 - k_v)}\right]$$

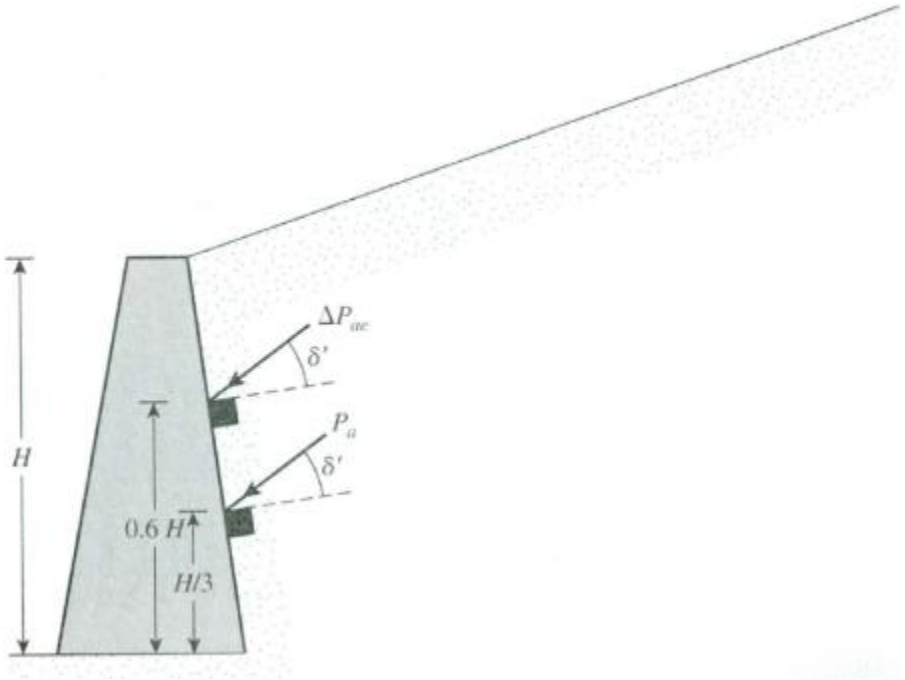

Step 1. Calculate P_{ae}

Step 2. Calculate P_a

Step 3. Calculate

$$\Delta P_{ae} = P_{ae} - P_a$$

The hospital code of State of California suggested the seismic increment of earth pressure as a uniform distributed pressure equals

$$P_{seismic} = 0.03\, Z\, \gamma\, H$$

γ = unit weight
H = height of retaining wall
Z = seismic hazards zone (Z = 1 for zone 4).

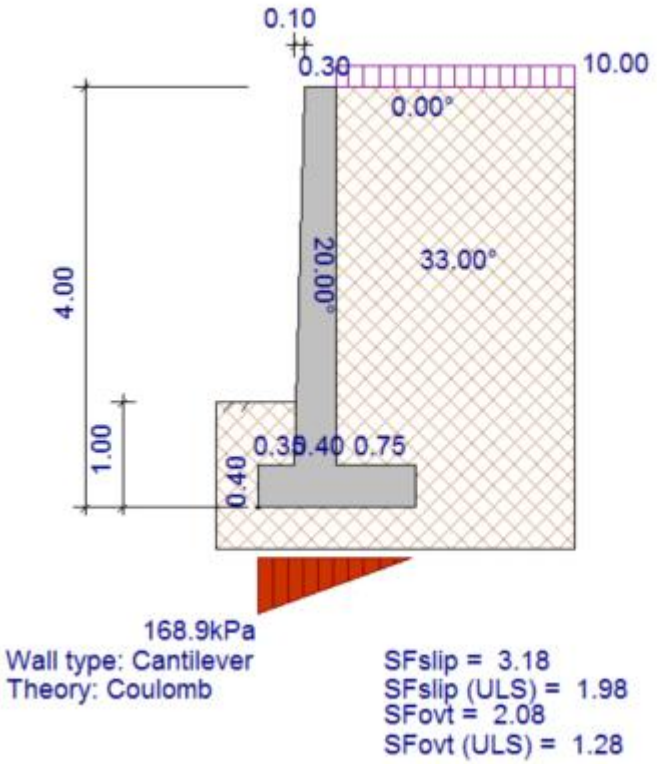

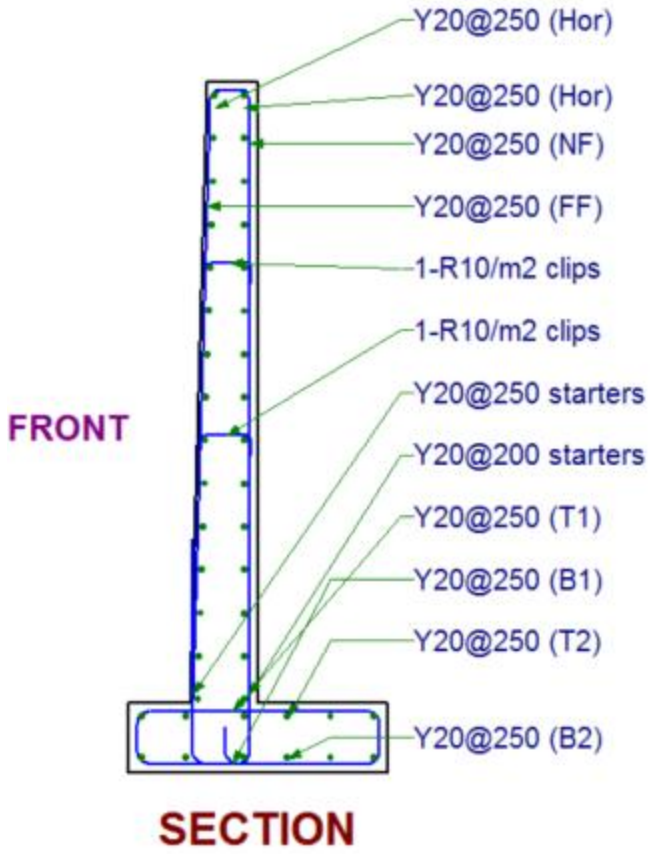

RW analysis with Prokon software Without seismic loads

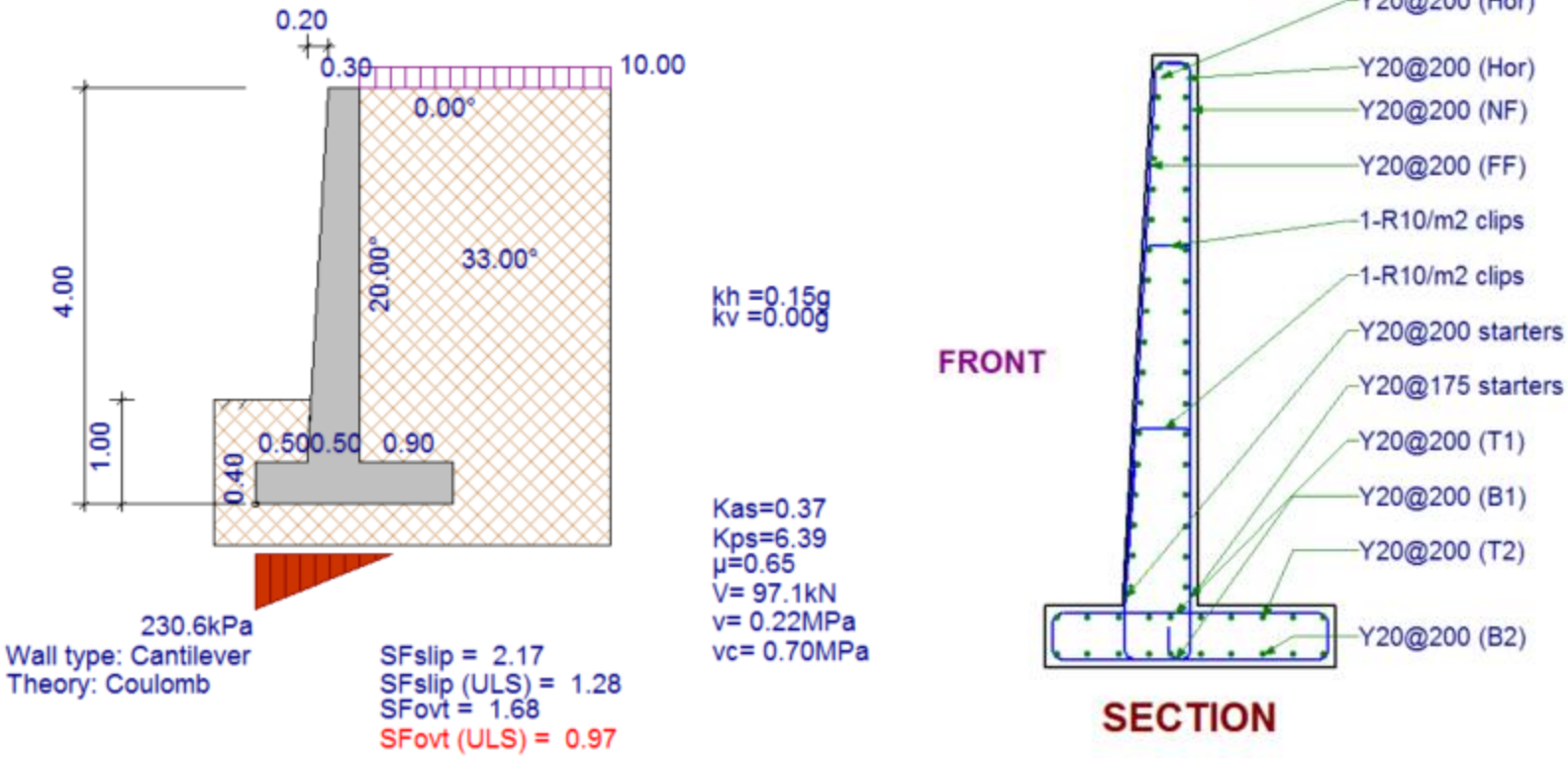

RW analysis with Prokon software with seismic loads

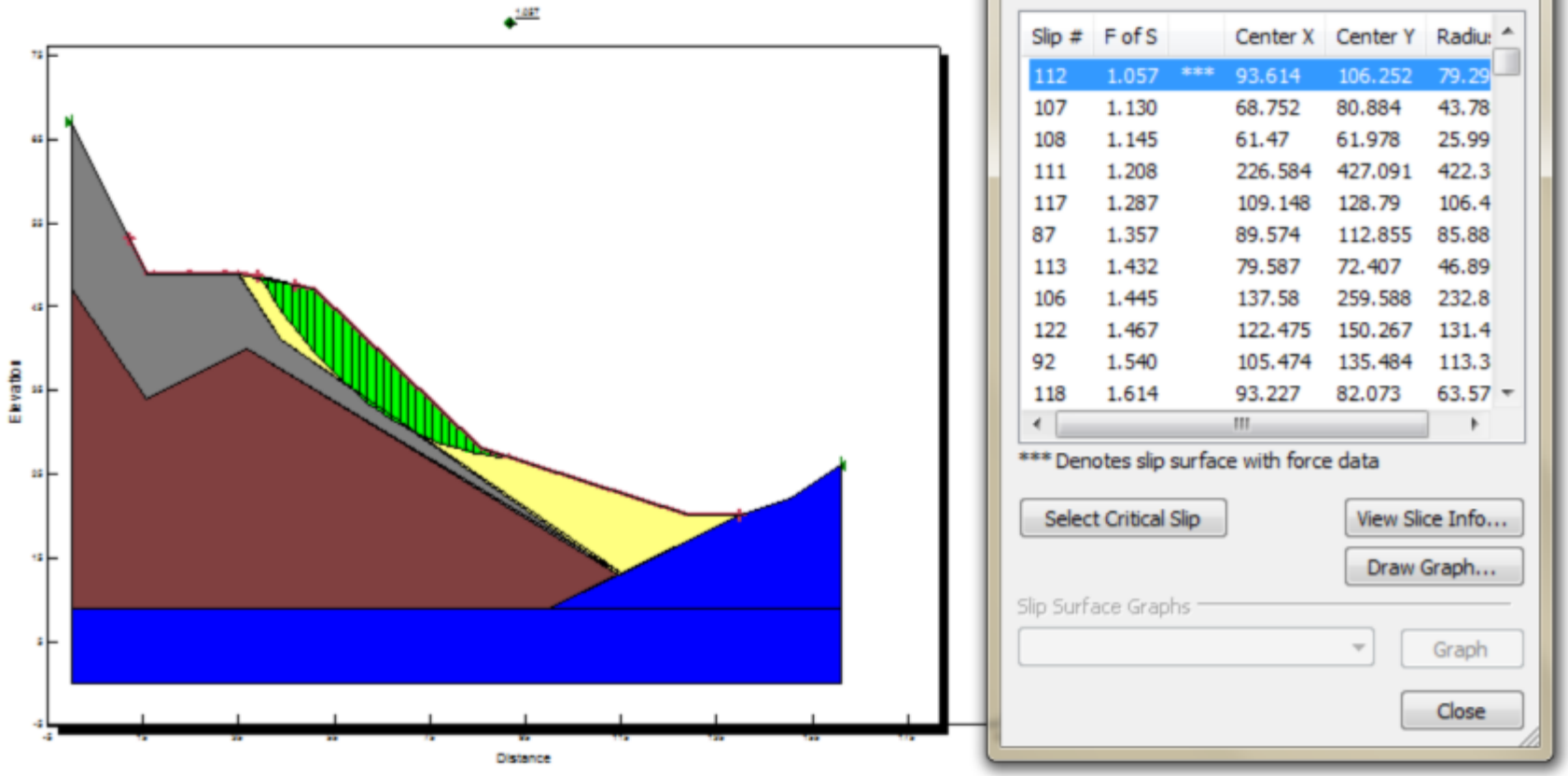

Slope stability analysis without seismic load.

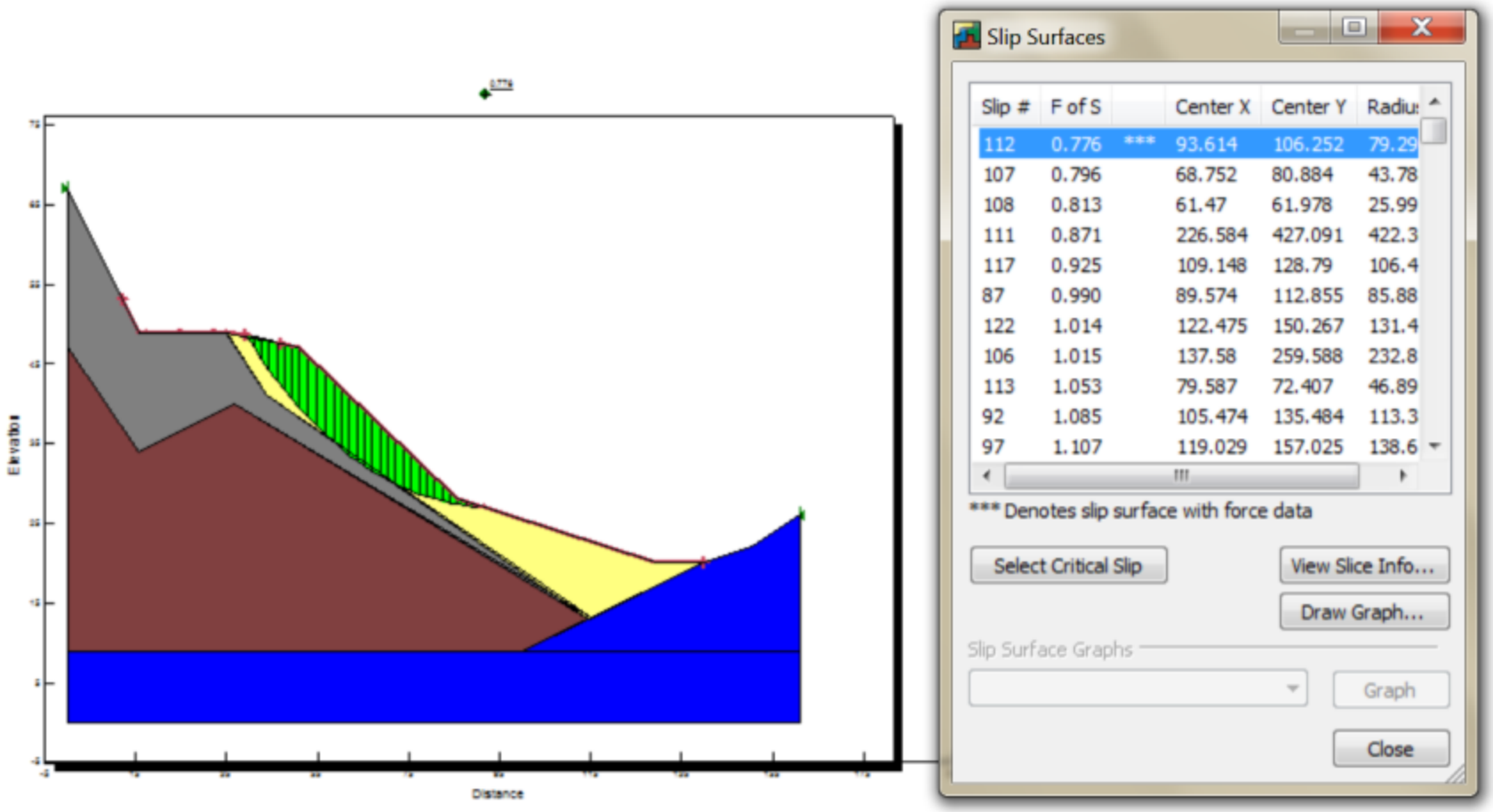

Slope stability analysis with seismic load.

Thank you for your attention